Hisense

TECHNICAL & SERVICE MANUAL V2.0

—ON/OFF AIR CONDITIONERS

MODEL:

Duct
AUD-09HX4SVNL
AUD-12HX4SVNL
AUD-18HX4SSNL1
AUD-24HX4SFLH1
AUD-36HX4SDHH2
AUD-36HX6SDHH1
AUD-48HX6SEHH1
AUD-60HX6SPHH1

Cassette
AUC-09HR4SVAA
AUC-12HR4SVAA
AUC-18HR4SSAA1
AUC-24HR4SFJA
AUC-36HR4SDKA
AUC-36HR6SDKA
AUC-48HR6SEKA
AUC-60HR6SPKA

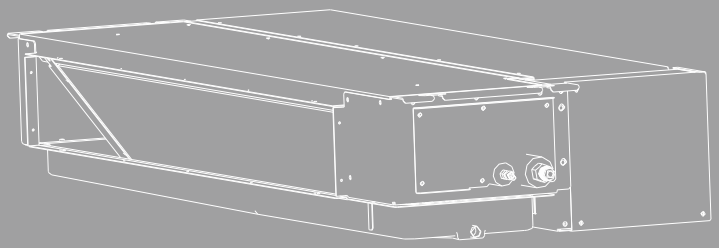

Ceiling & Floor
AUV-18HR4SSA1
AUV-24HR4SFA1
AUV-36HR4SDB2
AUV-36HR6SDB1
AUV-48HR6SEC1
AUV-60HR6SPC1

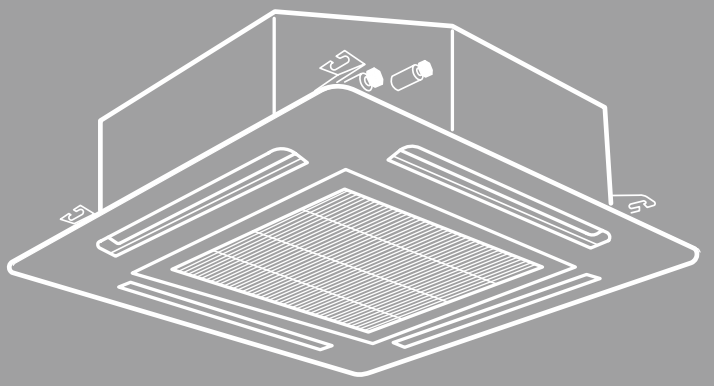

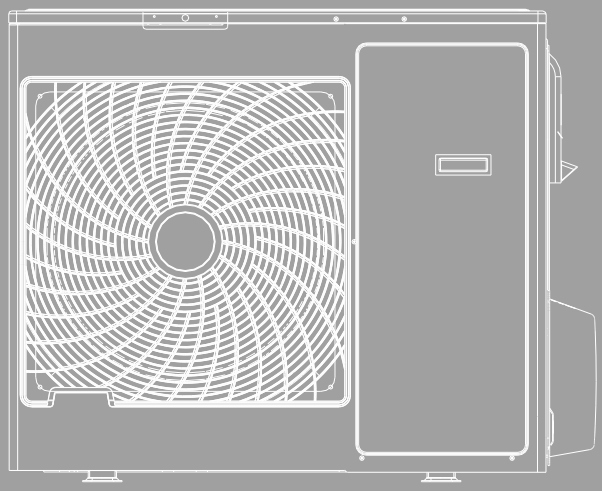

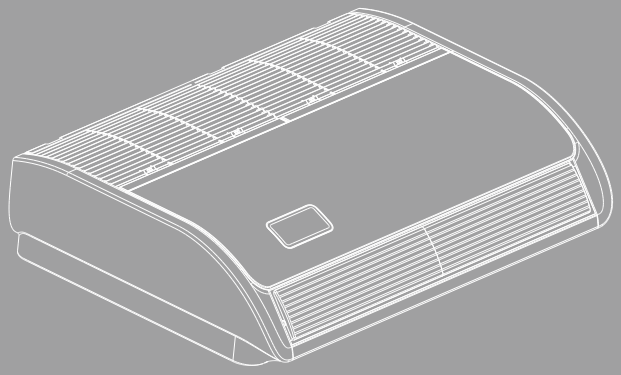

HISENSE Split Air Conditioner Technical Catalogue

Table of Contents

1. GENERAL

1. General

1.1 Features

Duct Air Conditioner

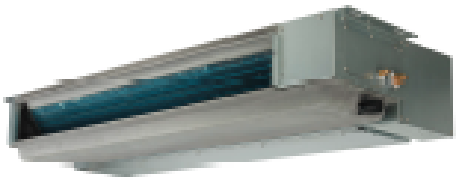

Features

- **Save Installation Space**

  The indoor unit can be installed inside the ceiling conveniently.

- **Optional Static Pressure**

  Optional ESP, a variety of optional installation methods.

- **High Efficiency and Environment Friendly New Refrigerant-R410A**

  R410A can protect the environment and do not harm to the ozone layer.

- **24-hour Timer ON and OFF**

  This Timer can be set to automatically turn the unit on or off within a 24-hour period.

- **Mute Operation**

  The excellent fan design enable the airflow to be quiet and smooth with minimum noise.

- **Meeting Various Installation Requirements**

  The back-air-inlet type is usually to be adopted according to the actual installation space.The unit is also installed with down-air-inlet type and the noise will increase about 5-6dB.

- **Auto re-start from Power Break**

  When the power supply is recovered after power break, all preset are still effective and the air-conditioner will run according to the previous setting.

- **Fault Self-diagnose Function**

  When there is something wrong with the air-conditioner，the micro computer could diagnose the faults, which can be read from the display and is convenient for maintenance.

1. GENERAL

Cassette Air Conditioner

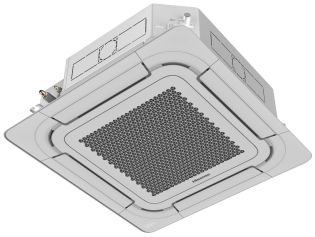

Features

- Save Installation Space

  The indoor unit can be installed inside the ceiling conveniently.

- High Efficiency and Environment Friendly New Refrigerant-R410A

  R410A can protect the environment and do not harm to the ozone layer.

- 24-hour Timer ON and OFF

  This Timer can be set to automatically turn the unit on or off within a 24-hour period.

- Mute Operation

  The excellent fan design enable the airflow to be quiet and smooth with minimum noise.

- **Auto re-start from Power Break**

  When the power supply is recovered after power break, all preset are still effective and the air-conditioner will run according to the previous setting.

- Fault Self-diagnose Function

  When there is something wrong with the air-conditioner, the micro computer could diagnose the faults, which can be read from the display and is convenient for maintenance.

1. GENERAL

Floor Ceiling Air Conditioner

Features

- **Save Installation Space**

  The indoor unit's thickness is only 230mm,can be installed inside the ceiling conveniently.

- **Flexible Installation Options**

  According to the actual installation space,The indoor unit can be installed in the ceiling or on the floor. One unit, Two installation method.

- **High Efficiency and Environment Friendly**

  New Refrigerant-R410A

  R410A can protect the environment and do not harm to the ozone layer.

- **24-hour Timer ON and OFF**

  This Timer can be set to automatically turn the unit on or off within a 24-hour period.

- **Mute Operation**

  The excellent fan design enable the airflow to be quiet and smooth with minimum noise.

- **Various Refrigerant Pipe Connect Methods**

  The refrigerant pipe can be connected from 3 different directions (rear, right or top).

- **Auto re-start from Power Break**

  When the power supply is recovered after power break, all preset are still effective and the air-conditioner will run according to the previous setting.

- **Fault Self-diagnose Function**

  When there is something wrong with the air-conditioner, the micro computer could diagnose the faults, which can be read from the display and is convenient for maintenance.

1. GENERAL

1.2 Product lineup

Type \ Model(Btu/h)	9K	12K	18K	24K	36K	48K	60K
Duct	●	●	●	●	●	●	●
Cassette	●	●	●	●	●	●	●
Ceiling & Floor			●	●	●	●	●

●----available model

1.3 Nomenclature

A U D - 09 H X 4 S N N L

- L: Product ESP
  L: Low ESP M: Medium ESP H: High ESP
- N: Indoor Unit Code
- N: Outdoor Unit Code
- S: Refrigerant Type S: R410A F: R22 R: R32
- 4: Power Supply
  2: 220-230V ~/60Hz 4: 220-240V ~/50Hz
  5: 220-230V ~/60Hz 6: 380-415V 3N~/50Hz
- X: Type of Controller
  X: Wired Controller, R: Wireless Remote Controller
- H: Type of Mode:
  U: DC-Invert HP, H: Fixed Speed HP, C: Fixed Speed CO
- 09: Cooling Capacity: 09×10^3 Btu/h
- D: Type of Product
  D: Duct, C: Cassette, V: Ceiling & Floor, F: Floor-standing, W: Outdoor Unit
- U: Unit
- A: Air Conditioner

1.4 Unit construction

It is possible only by 1:1 system.

(1 indoor unit only can be connected with 1 outdoor unit.)

1.5 Working range

Power Supply

Working Voltage	198V ~ 253V(9K/12K/18K/24K),342V ~ 438V(36K/48K/60K)
Voltage Imbalance	Within a 3% deviation from each voltage at the main terminal of outdoor unit
Starting Voltage	Higher than 85% of the Rated Voltage

Operating temperature range

This air conditioner has been designed for the following outdoor operating temperatures.

9K/12K

Series	Mode	Outdoor operating Temperatures range	
		Maximum (℃)	Minimum (℃)
Heat Pump Type	Cooling Operation	43	15
	Heating Operation	24	-10

18K/24K/36K/48K/60K

Series	Mode	Outdoor operating Temperatures range	
		Maximum (℃)	Minimum (℃)
Heat Pump Type	Cooling Operation	43	-15
	Heating Operation	24	-10

Storage condition:

Temperature -20~65℃

Humidity 30%~80%

1.6 Product appearance

Duct Type

Model (capacity)	9K/12K	18K
Indoor Unit		
Outdoor Unit	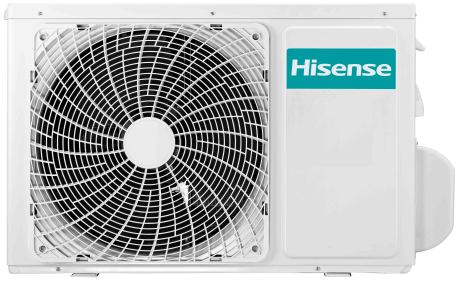	
Model (capacity)	24K	36K
Indoor Unit		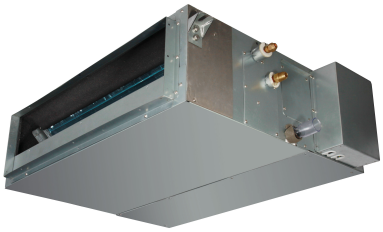
Outdoor Unit		

1. GENERAL

Model (capacity)	48K	60K
Indoor Unit	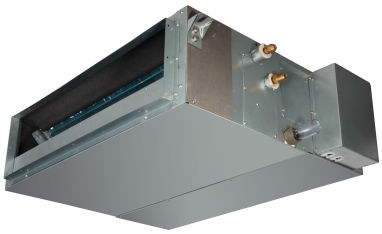	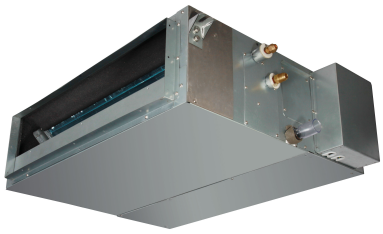
Outdoor Unit		

1. GENERAL

Cassette Type

Model (capacity)	9K/12K	18K
Indoor Unit		
Outdoor Unit	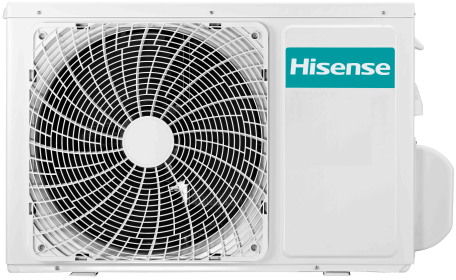	
Model (capacity)	24K	36K
Indoor Unit	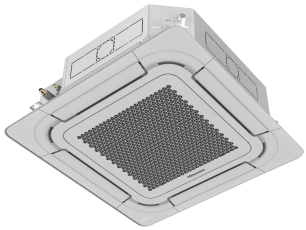	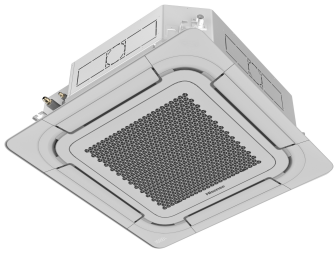
Outdoor Unit	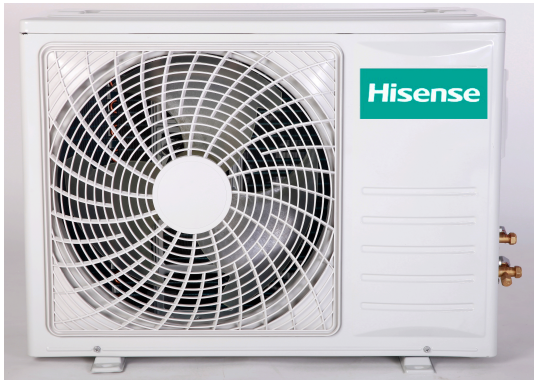	

1. GENERAL

Model (capacity)	48K	60K
Indoor Unit	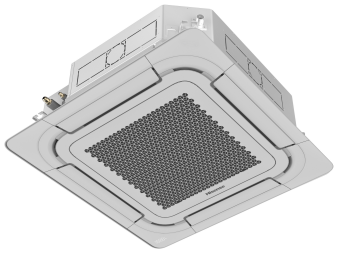	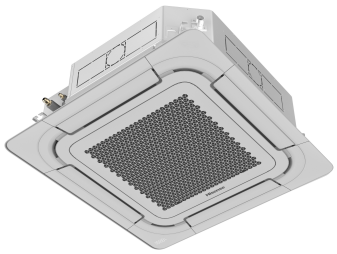
Outdoor Unit		

1. GENERAL

Ceiling & Floor Type

Model (capacity)	18K	24K
Indoor Unit		
Outdoor Unit		
Model (capacity)	36K	48K
Indoor Unit		
Outdoor Unit		

1. GENERAL

Model (capacity)	60K
Indoor Unit	
Outdoor Unit	

1. GENERAL

Display panel

Cassette Type

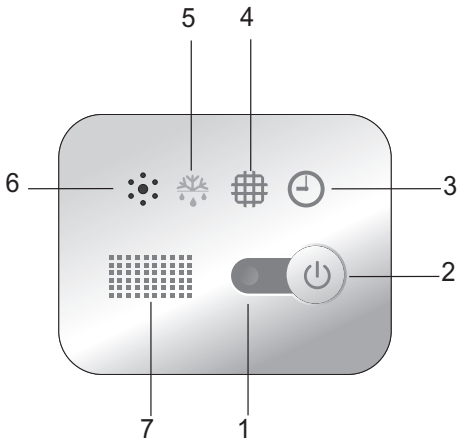

Ceiling & Floor type

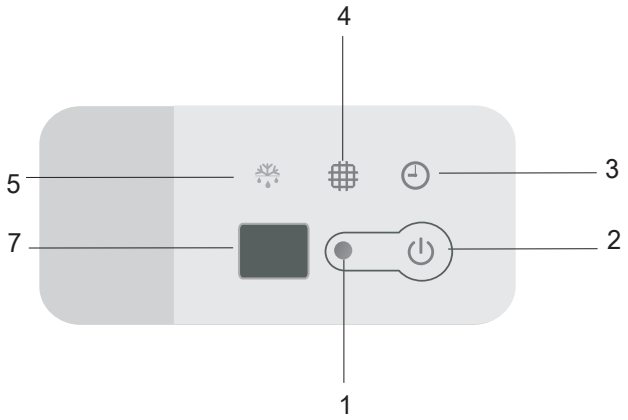

Description

1 Run indicator (Red)
It lights on during operation. It lights off during SLEEP mode.

2 Emergency switch
The filter clean indicator will be off when the switch is pressed. The unit will stop operation if pressing the button.When the unit is off,it will start auto operation if pressing the button,if pressing for more than 5s, the unit will operate in cooling mode.

3 Timer indicator (Green)
It lights on when timer is in use. It lights off when timer finishes.

4 Filter clean (Yellow)
It lights on when the filter should be cleaned.

5 Defrost indicator (Green)
It lights on during defrosting It lights off when defrosting is finished.

6 Buzzer
It beeps when the signal from remote controller is received.

7 Infrared receiver
Receives signal from the remote controller.

1. GENERAL

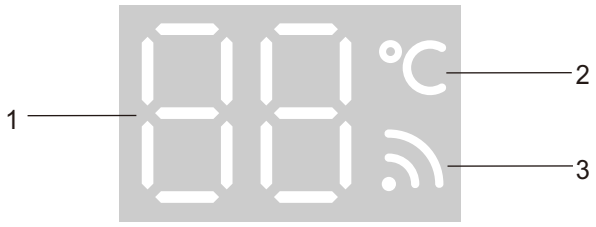

1 Temperature indicator

Display indoor set temperature or indoor temperature and it displays error code when fault occurs.

2 Temperature Unit (℃) indicator

It lights up when the air conditioner starts up and stops lighting when it is turned off.

3 Wi-Fi receiver

It lights up when Wi-Fi is connected. It stops lighting when Wi-Fi is disconnected.
It indicates there is a Wi-Fi fault or the network is configured when the icon flashes.

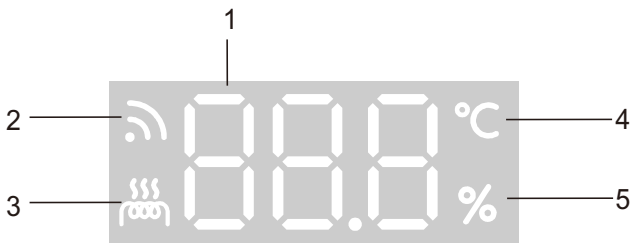

1 Temperature/humidity indicator
Display indoor set temperature or indoor temperature; Display indoor set humidity or indoor humidity.

2 Wi-Fi receiver
It lights up when Wi-Fi is connected. It stops lighting when Wi-Fi is disconnected.

3 Electric heater indicator（It is only valid for the air conditioner with electric heater function.）
It lights up during heating mode when electric heater is on. It stops lighting when heater is completed.

4 Temperature Unit (℃) indicator

It lights up when the air conditioner displays with Celsius temperature, and stops lighting when it is displays with Fahrenheit temperature.

5 Humidity indicator
It lights up when display humidity. It stops lighting when humidity display is completed.

- ***The figures in this manual are based on the external view of a standard model. Consequently, the shape may differ from that of the air conditioner you have selected.***

* ***It can be set or canceled by professional after-sale staff***

2. Outlines and dimensions

2.1 Indoor units

Duct

Unit: mm

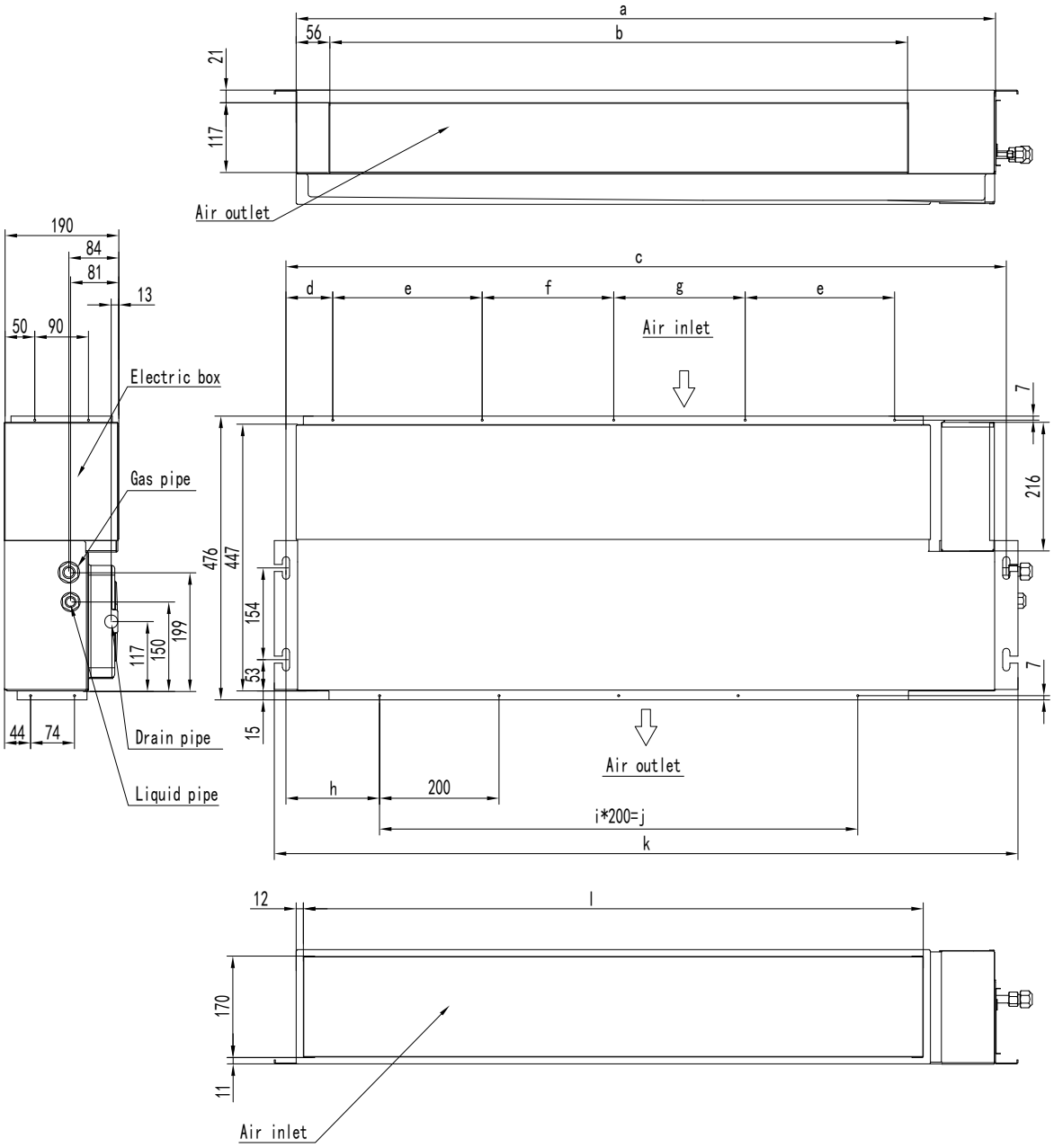

Model	a	b	c	d	e	f	g	h	i	j	k	l
9K/12K/18K	900	701	937	73	240	200	0	122	3	600	976	769

2. OUTLINES AND DIMENSIONS

Unit: mm

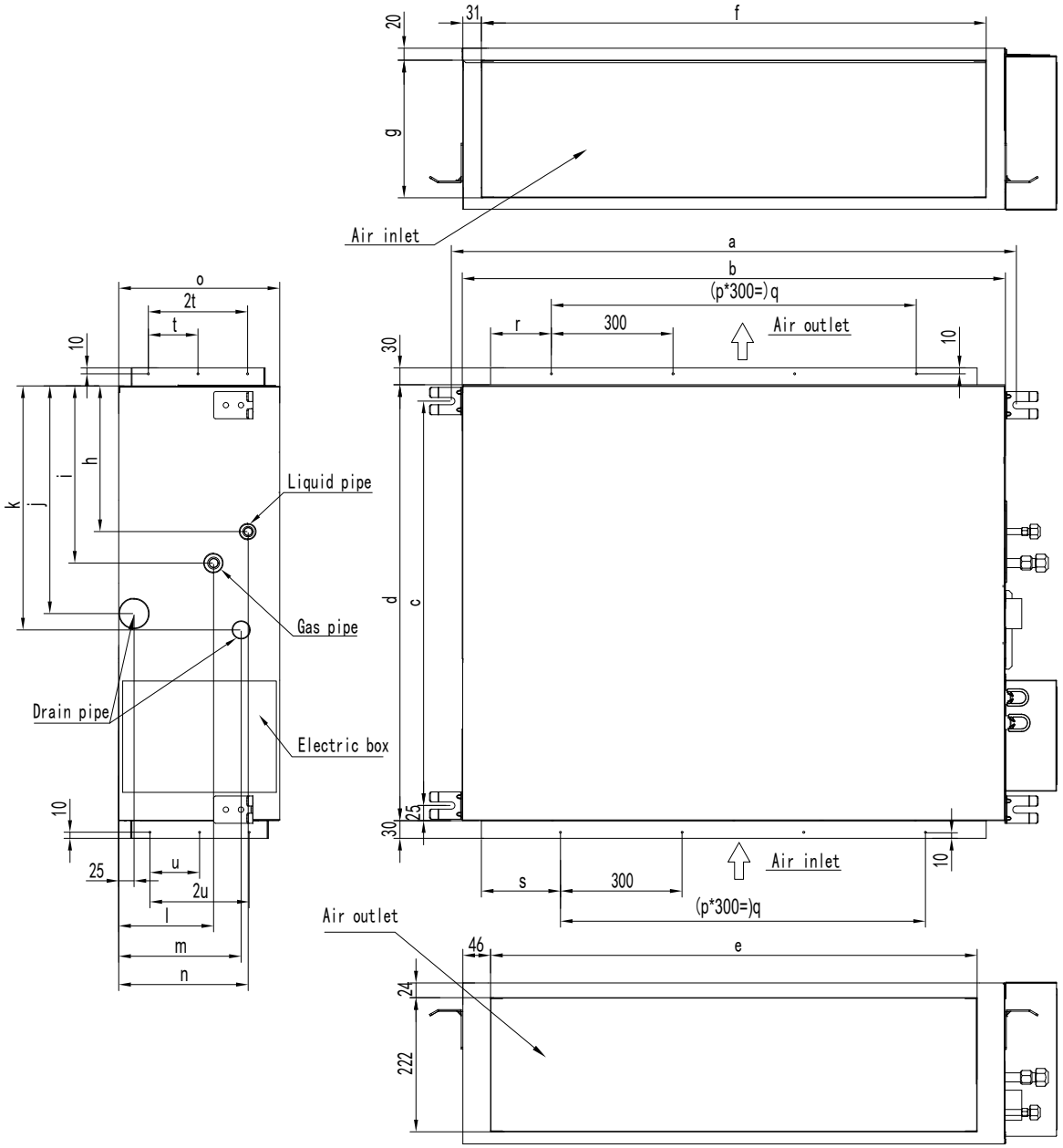

Model	a	b	c	d	e	f	g	h	i	j	k	l	m	n	o	p	q	r	s	t	u
24K	934	900	669	720	805	835	228	242	294	378	405	156	202	214	270	2	600	102	117	82	82
36K/48K/60K	1334	1300	756	800	1205	1235	308	237	312	375	400	204	186	242	350	3	900	153	168	90	140

2. OUTLINES AND DIMENSIONS

Cassette

9K/12K/18K

Unit: mm

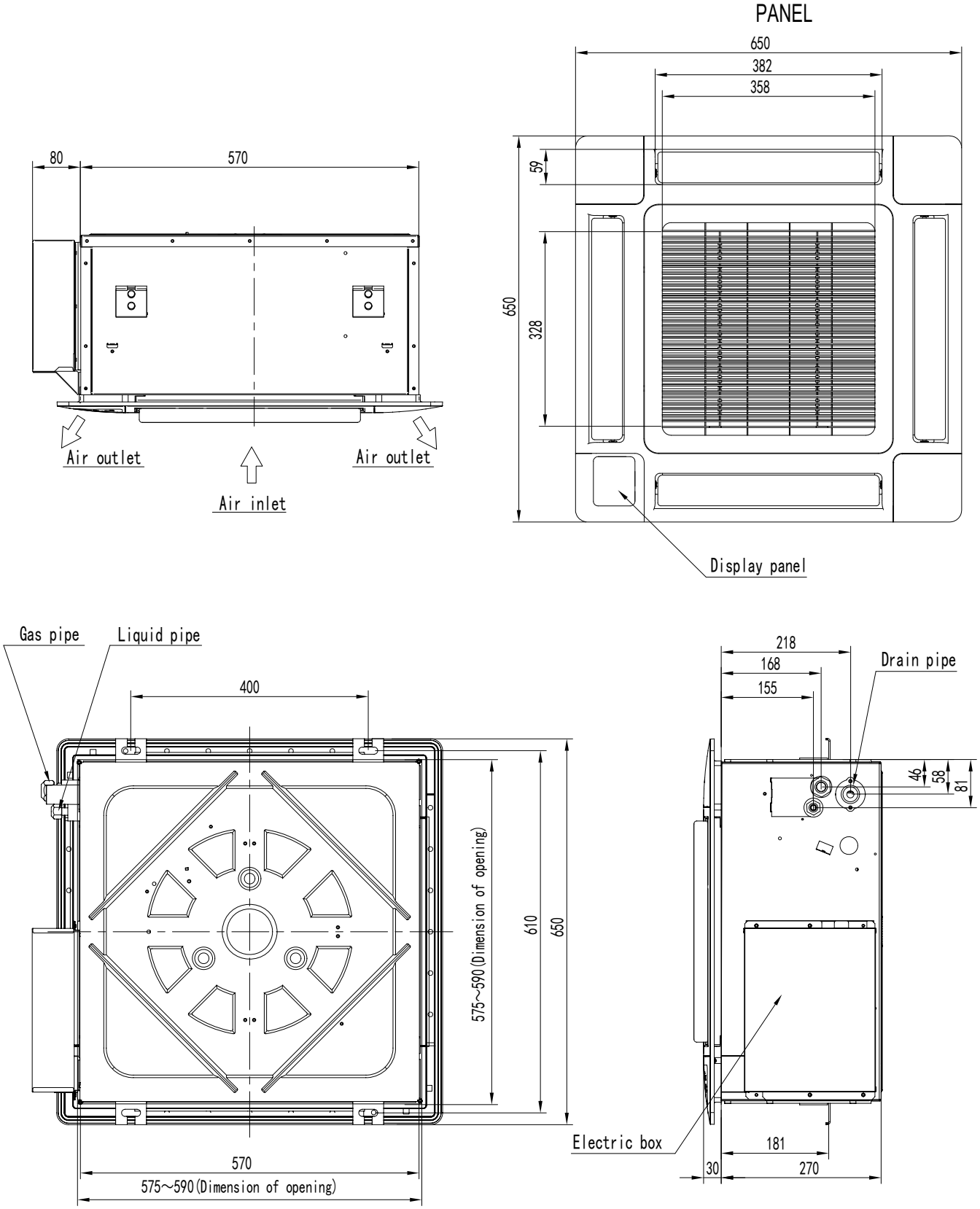

2. OUTLINES AND DIMENSIONS

Unit: mm

24K,36K,48K,60K

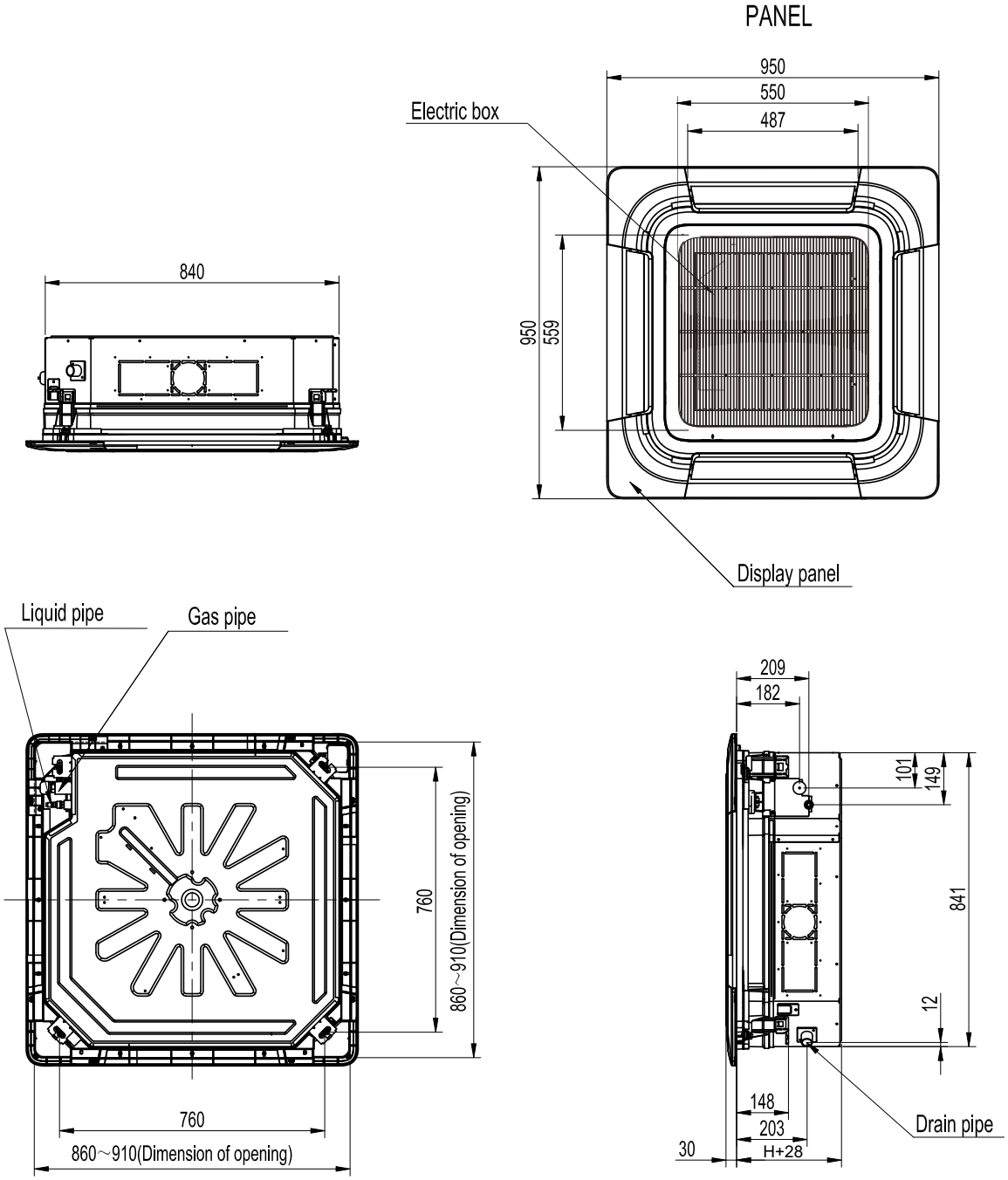

Model	a
24K	236
36K~60K	272

2. OUTLINES AND DIMENSIONS

Ceiling&Floor

Unit: mm

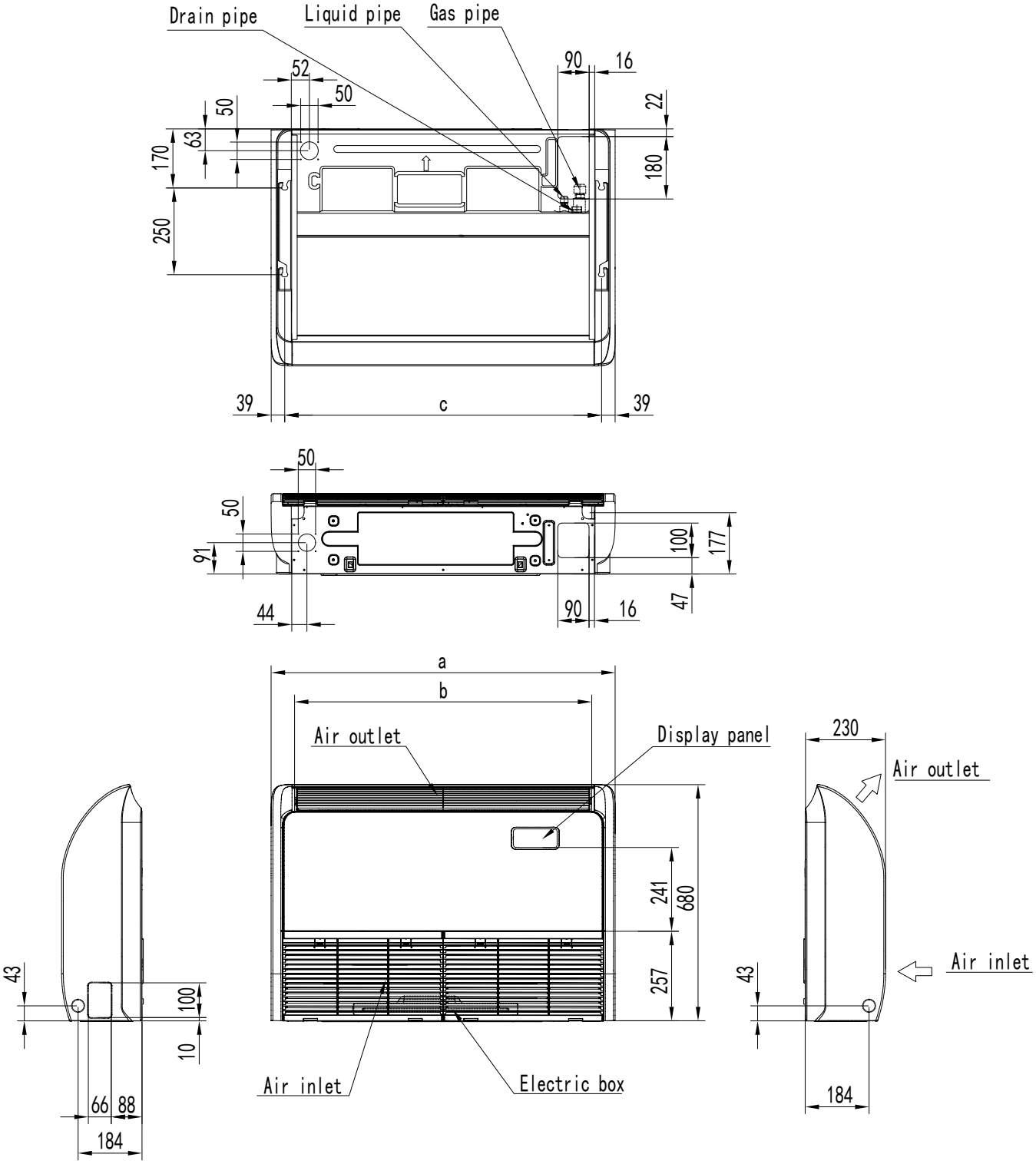

Model	a	b	c
18K/24K	990	855	912
36K	1285	1150	1207
48K/60K	1580	1445	1502

2. OUTLINES AND DIMENSIONS

2.2 Outdoor units

9K/12K

Unit: mm

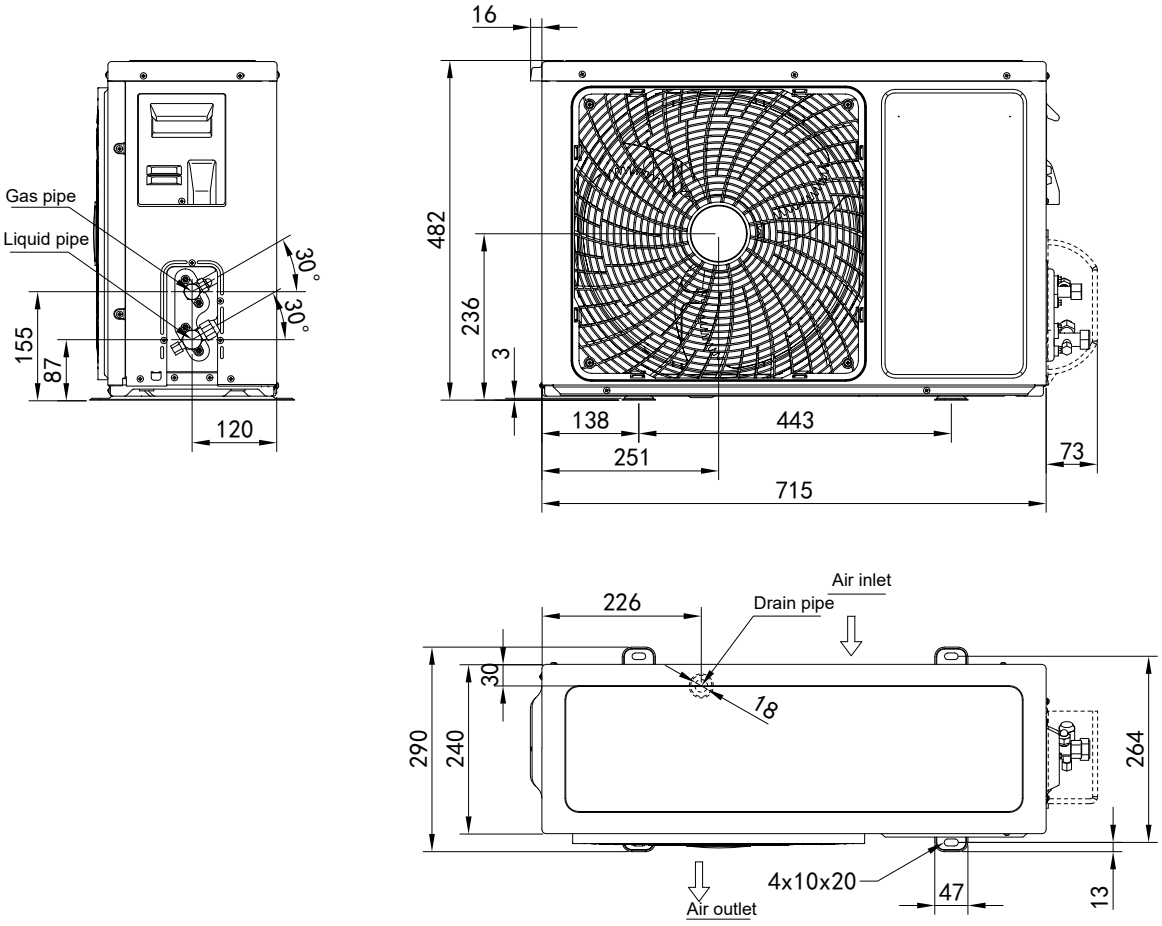

2. OUTLINES AND DIMENSIONS

18K **Unit: mm**

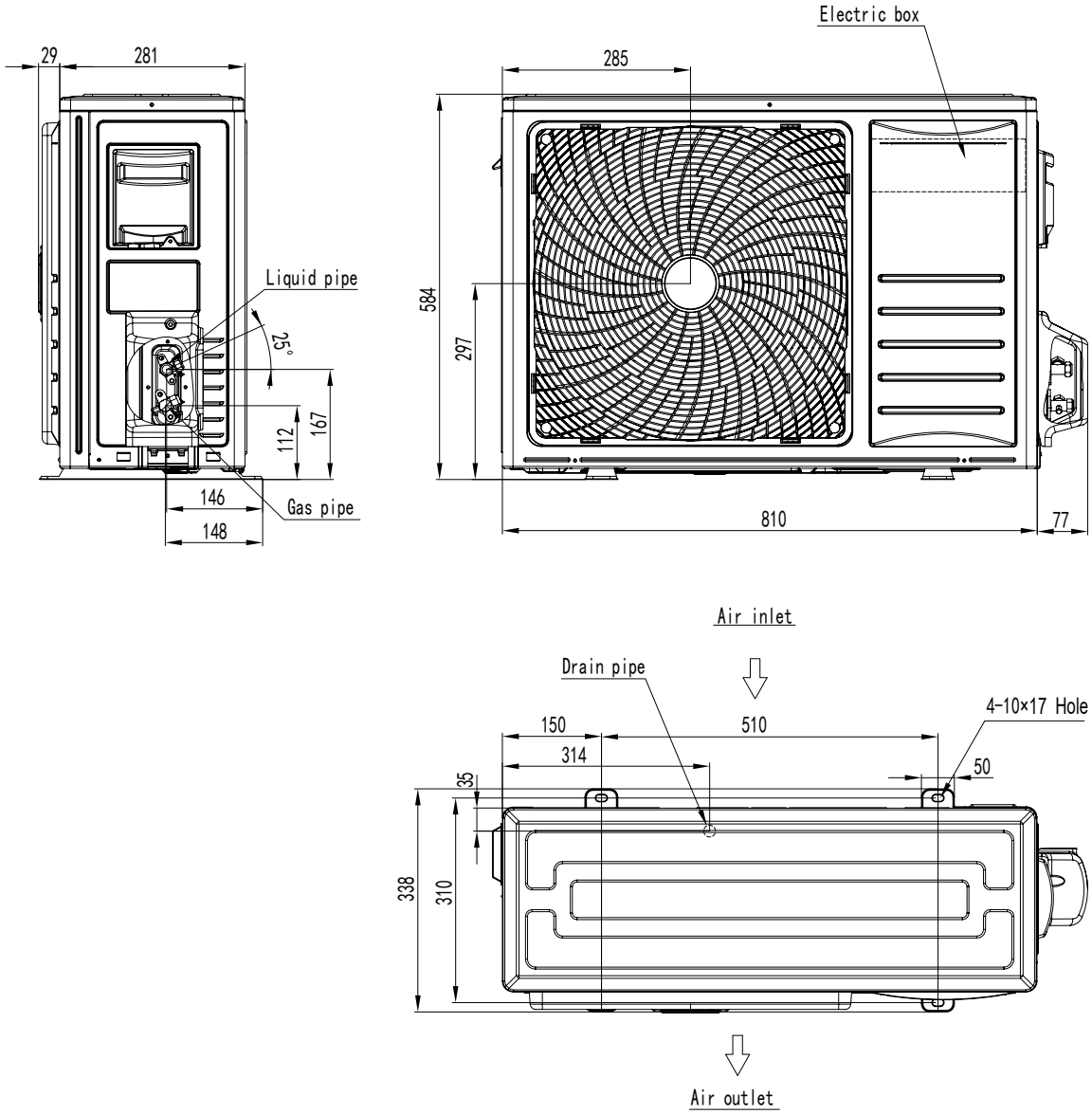

2. OUTLINES AND DIMENSIONS

24K **Unit: mm**

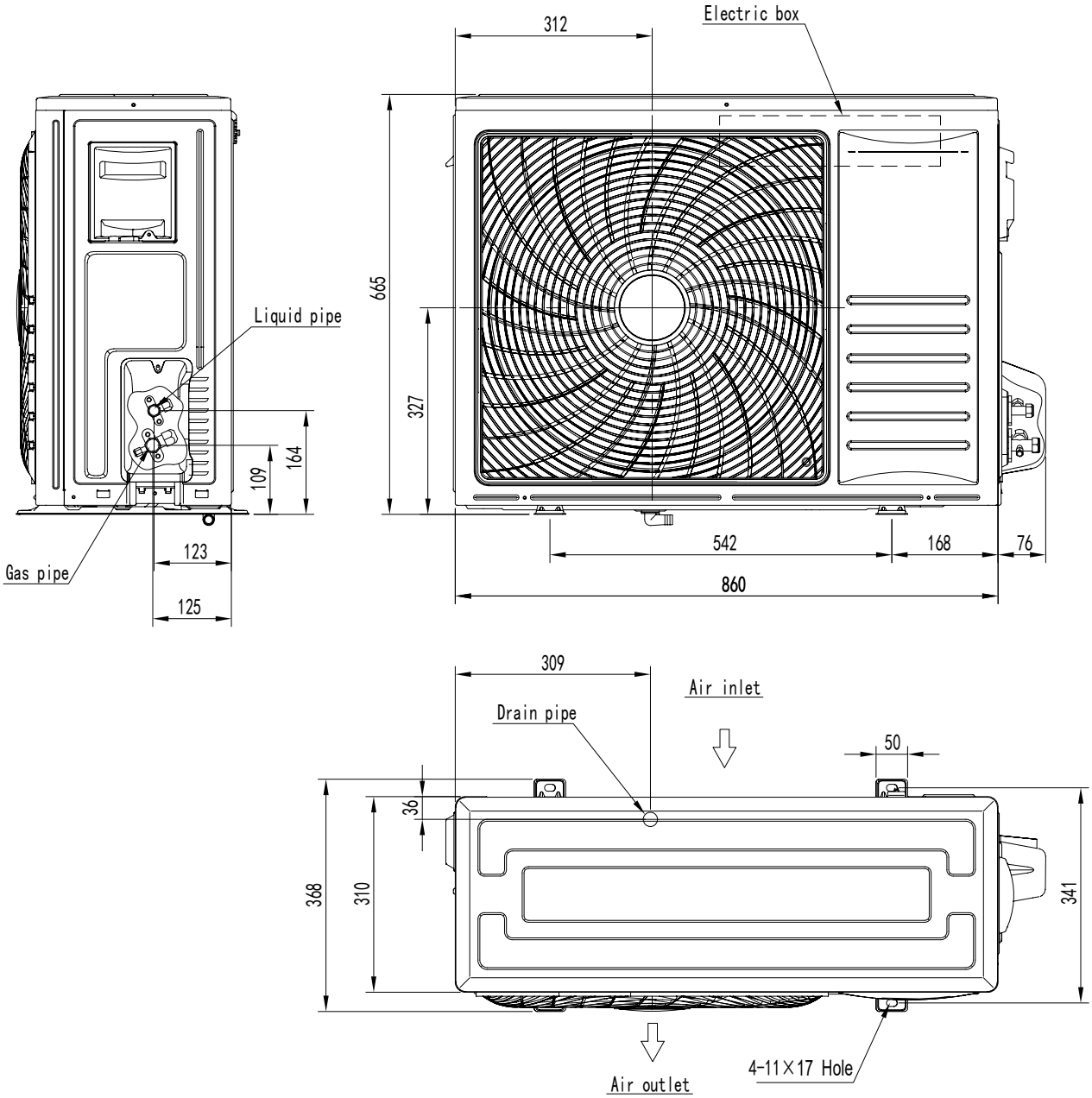

2. OUTLINES AND DIMENSIONS

36K Unit: mm

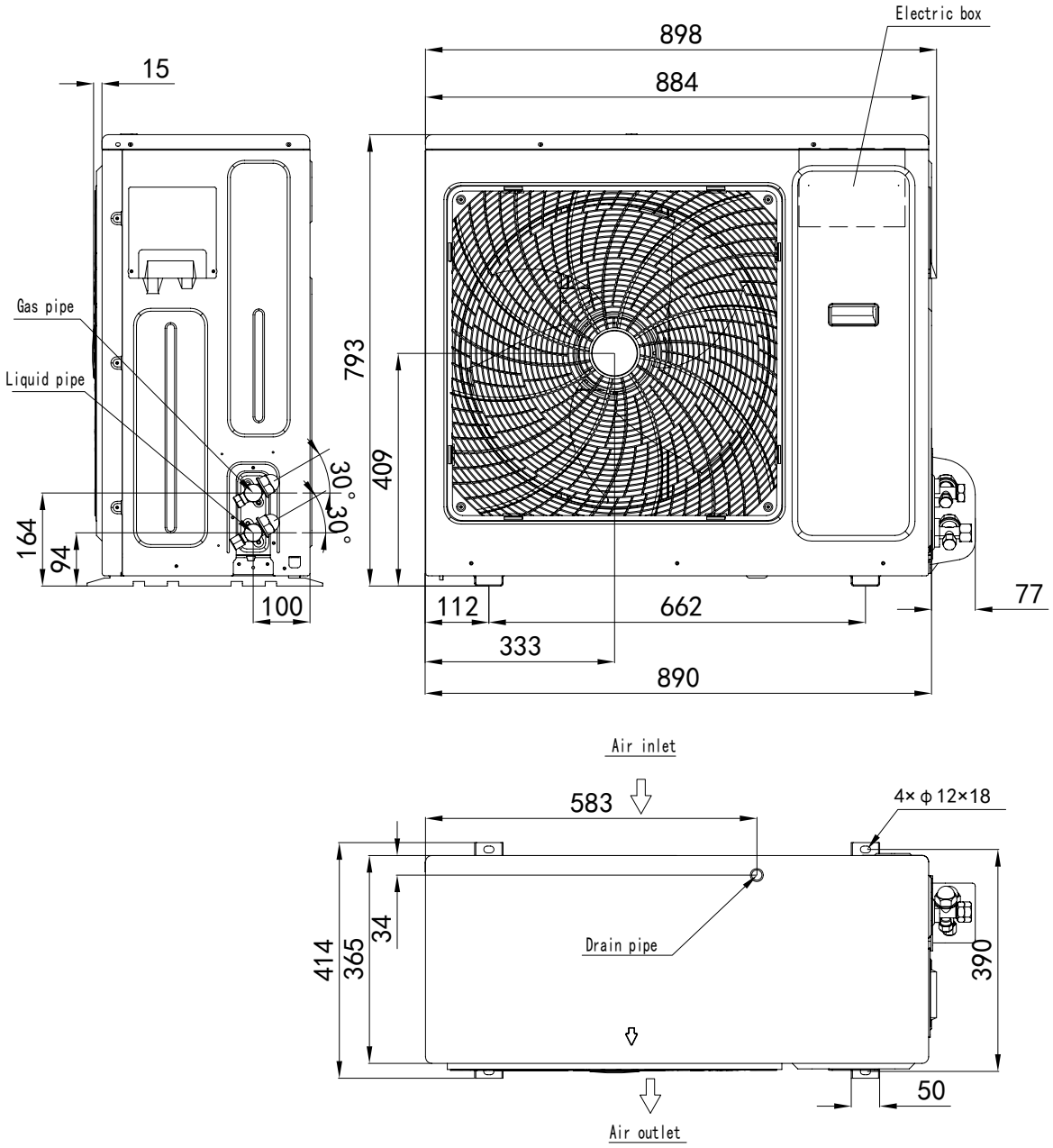

2. OUTLINES AND DIMENSIONS

48K Unit: mm

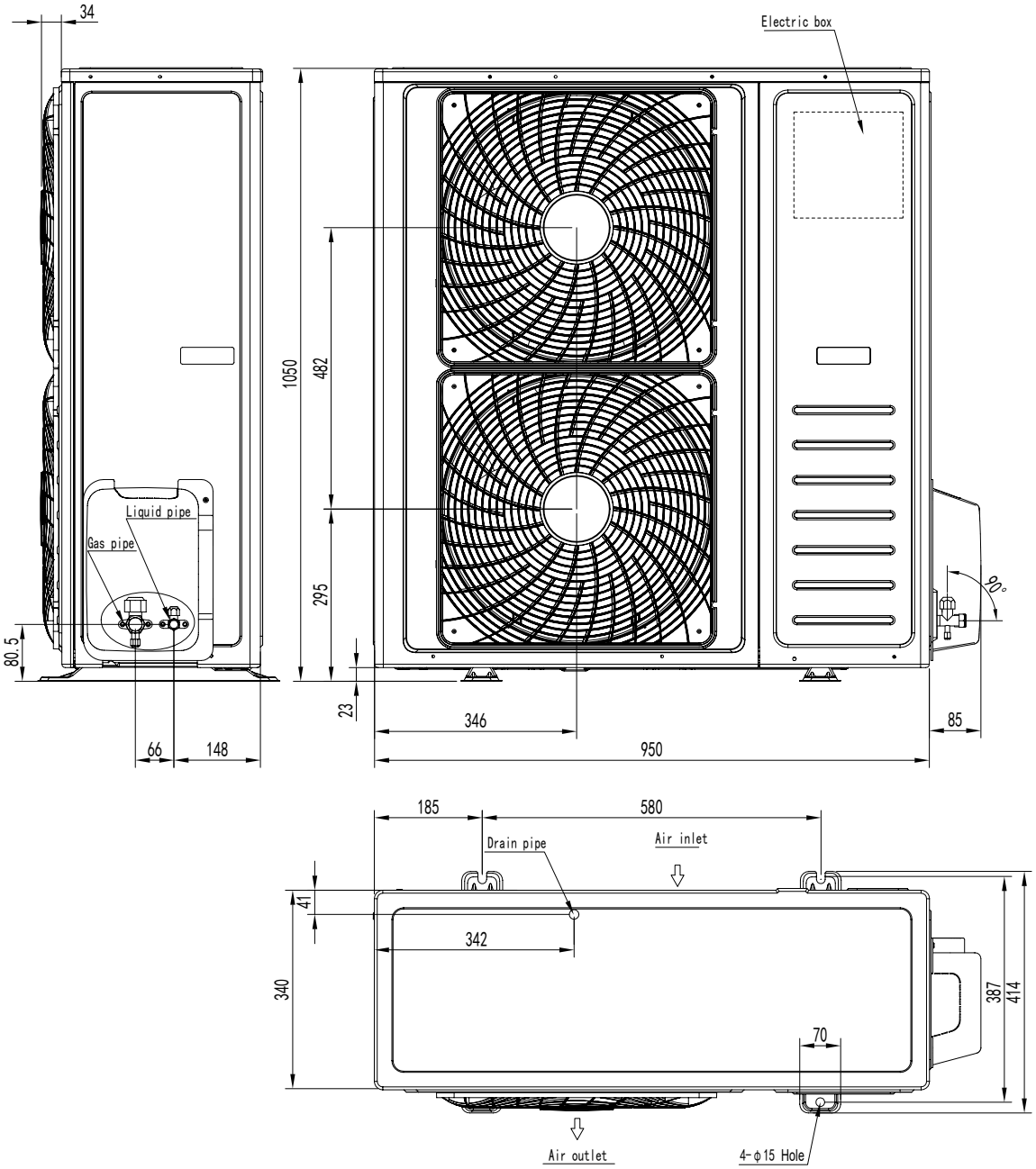

2. OUTLINES AND DIMENSIONS

60K

Unit: mm

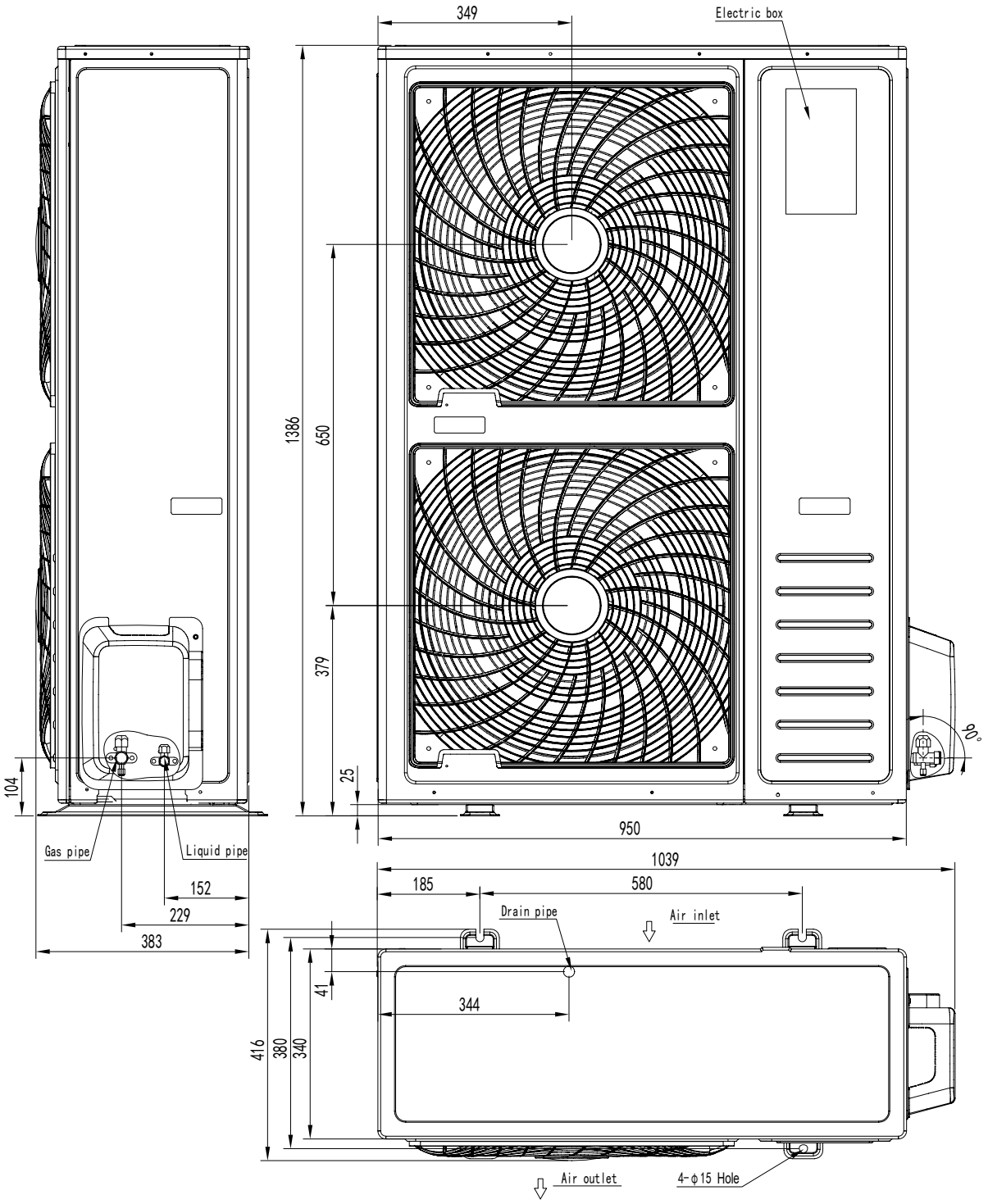

3. Electrical data

	Power supply			Applicable voltage		ELB	
Outdoor unit	Voltage(V)	PH	Frequency	Umin(V)	Umax(V)	Nominal Current(A)	Nominal Sensitive Current(mA)
9K/12K	220-240	1	50	176	264	16	30
18K	220-240	1	50	176	264	20	30
24K	220-240	1	50	176	264	32	30
36K(Single-Phase)	220-240	1	50	176	264	40	30
36K(3-Phase)	380-415	3	50	342	418	16	30
48K/60K	380-415	3	50	342	418	32	30

NOTE:

1. The above compressor data is based on 100% capacity combination of indoor units at the rated operating frequency

2. This data is based on the same conditions as the nominal heating and cooling capacities.

4. Capacities and selection data

4.1 Capacity Characteristic charts

The following charts show the characteristics of outdoor unit capacity, which corresponds with the operating ambient temperature of outdoor unit.

Conditions:

① Pipe length / height difference : 5m / 0m（9K/12K/18K/24K/36K） 7.5m / 0m（48K/60K）

② Indoor fan speed at high fan speed

③ Capacity loss due to white frost and defrost operation is not included. Duct

9K

COOLING CAPACITY(kW)

Indoor inlet temperature（℃）		Outdoor temperature（℃ DB）							
(℃ WB)	(℃ DB)	-15	15	20	25	32	35	40	43
14.0	20	3.3	3.1	3.0	2.9	2.7	2.4	2.2	2.0
16.0	22	3.5	3.3	3.2	3.1	2.9	2.6	2.4	2.2
18.0	25	3.6	3.5	3.3	3.2	3.0	2.8	2.6	2.4
19.0	27	3.7	3.6	3.5	3.4	3.2	3.0	2.8	2.6
19.5	27	3.8	3.7	3.6	3.5	3.3	3.1	2.9	2.7
22.0	30	4.1	4.0	3.9	3.7	3.6	3.4	3.2	3.0
24.0	32	4.3	4.2	4.1	3.9	3.8	3.6	3.4	3.1

(℃ DB) : Dry Bulb Temperature (℃)

(℃ WB) : Wet Bulb Temperature (℃)

HEATING CAPACITY(kW)

Indoor inlet temperature（℃）	Outdoor temperature（℃ DB）						
(℃ DB)	-15.0	-10.0	-5.0	0.0	6.0	10.0	15.0
16.0	2.4	2.7	2.9	3.2	3.5	3.8	4.0
18.0	2.3	2.6	2.8	3.0	3.3	3.6	3.9
20.0	2.2	2.5	2.7	2.8	3.1	3.5	3.8
21.0	2.1	2.4	2.6	2.7	3.0	3.4	3.7
22.0	2.0	2.3	2.5	2.6	2.9	3.3	3.5
24.0	1.9	2.2	2.4	2.5	2.8	3.2	3.4
26.0	1.8	2.1	2.3	2.4	2.7	3.1	3.3

(℃ DB) : Dry Bulb Temperature (℃)

(℃ WB) : Wet Bulb Temperature (℃)

4. CAPACITIES AND SELECTION DATA

12K

COOLING CAPACITY(kW)

Indoor inlet temperature（℃）		Outdoor temperature（℃ DB）							
(℃ WB)	(℃ DB)	-15	15	20	25	32	35	40	43
14.0	20	3.5	3.3	3.2	3.1	2.9	2.7	2.5	2.3
16.0	22	3.7	3.5	3.4	3.3	3.2	3.0	2.7	2.5
18.0	25	3.9	3.7	3.6	3.5	3.4	3.3	2.9	2.7
19.0	27	4.1	3.9	3.8	3.7	3.6	3.5	3.2	2.9
19.5	27	4.2	3.9	3.8	3.7	3.7	3.6	3.3	3.0
22.0	30	4.3	4.2	4.1	4.0	3.9	3.8	3.5	3.2
24.0	32	4.5	4.4	4.3	4.2	4.1	4.0	3.7	3.4

(℃ DB) : Dry Bulb Temperature (℃)

(℃ WB) : Wet Bulb Temperature (℃)

HEATING CAPACITY(kW)

Indoor inlet temperature（℃）	Outdoor temperature（℃ DB）						
(℃ DB)	-15.0	-10.0	-5.0	0.0	6.0	10.0	15.0
16.0	2.4	2.7	3.4	3.8	4.0	4.3	4.5
18.0	2.3	2.6	3.0	3.6	3.8	4.1	4.3
20.0	2.2	2.5	2.8	3.3	3.6	3.9	4.1
21.0	2.1	2.4	2.6	3.2	3.5	3.7	3.9
22.0	2.0	2.3	2.5	2.9	3.3	3.5	3.7
24.0	1.9	2.2	2.4	2.7	3.1	3.2	3.5
26.0	1.8	2.1	2.3	2.5	2.8	3.0	3.2

(℃ DB) : Dry Bulb Temperature (℃)

(℃ WB) : Wet Bulb Temperature (℃)

18K

COOLING CAPACITY(kW)

Indoor inlet temperature（℃）		Outdoor temperature（℃ DB）					
(℃ WB)	(℃ DB)	20	25	32	35	40	43
14	20	4.7	4.5	4.4	4.3	3.9	3.7
16	22	4.9	4.8	4.7	4.6	4.1	3.8
18	25	5.3	5.2	5.0	4.9	4.2	3.9
19	27	5.4	5.3	5.1	5.0	4.4	4.0
19.5	27	5.6	5.4	5.2	5.1	4.5	4.2
22	30	5.8	5.7	5.4	5.3	4.8	4.5
24	32	6.0	5.8	5.5	5.4	4.9	4.5

(℃ DB) : Dry Bulb Temperature (℃)

(℃ WB) : Wet Bulb Temperature (℃)

4. CAPACITIES AND SELECTION DATA

HEATING CAPACITY(kW)

Indoor inlet temperature（℃）	Outdoor temperature（℃ DB）					
(℃ DB)	-10	-5	0	6	10	15
16	4.0	4.9	5.2	6.0	6.2	6.4
18	3.9	4.8	5.1	5.9	6.1	6.3
20	3.8	4.7	4.8	5.7	5.8	6.2
21	3.7	4.6	4.8	5.6	5.7	6.1
22	3.7	4.6	4.7	5.5	5.7	6.0
24	3.5	4.4	4.6	5.4	5.6	5.9
26	3.5	4.2	4.3	5.2	5.5	5.7

(℃ DB) : Dry Bulb Temperature (℃)

(℃ WB) : Wet Bulb Temperature (℃)

24K

COOLING CAPACITY(kW)

Indoor inlet temperature（℃）		Outdoor temperature（℃ DB）						
(℃ WB)	(℃ DB)	20	25	32	35	40	43	48
14.0	20	6.8	6.6	6.4	5.8	5.7	5.6	5.5
16.0	22	7.1	7.0	6.8	6.2	5.9	5.8	5.6
18.0	25	7.4	7.1	6.9	6.5	6.1	6.0	5.7
19.0	27	7.5	7.3	7.0	6.6	6.3	6.1	5.7
19.5	27	7.7	7.4	7.1	6.8	6.5	6.2	5.8
22.0	30	7.8	7.5	7.3	7.0	6.7	6.4	5.9
24.0	32	7.9	7.6	7.4	7.1	6.8	6.5	6.0

(℃ DB) : Dry Bulb Temperature (℃)

(℃ WB) : Wet Bulb Temperature (℃)

HEATING CAPACITY(kW)

Indoor inlet temperature（℃）	Outdoor temperature（℃ DB）					
(℃ DB)	-10.0	-5.0	0.0	6.0	10.0	15.0
16.0	5.6	6.6	6.8	7.7	7.8	7.9
18.0	5.5	6.5	6.7	7.6	7.7	7.7
20.0	5.4	6.4	6.5	7.4	7.6	7.6
21.0	5.4	6.3	6.3	7.3	7.5	7.6
22.0	5.3	6.2	6.2	7.2	7.4	7.4
24.0	5.2	6.1	6.1	7.0	7.3	7.3
26.0	5.1	6.0	6.0	6.9	7.1	7.2

(℃ DB) : Dry Bulb Temperature (℃)

(℃ WB) : Wet Bulb Temperature (℃)

4. CAPACITIES AND SELECTION DATA

36K（Single-Phase）

COOLING CAPACITY(kW)

Indoor inlet temperature（℃）		Outdoor temperature（℃ DB）							
(℃ WB)	(℃ DB)	-15	15	20	25	32	35	40	43
14.0	20	10.5	10.4	10.2	9.9	9.4	9.3	8.7	8.3
16.0	22	10.8	10.7	10.5	10.3	9.6	9.5	9.1	8.7
18.0	25	11.1	11.0	10.8	10.6	9.9	9.7	9.4	9.2
19.0	27	11.4	11.3	11.1	10.8	10.3	9.9	9.7	9.4
19.5	27	11.7	11.6	11.4	11.1	10.4	10.1	9.8	9.6
22.0	30	12.1	11.8	11.6	11.3	10.7	10.6	10.4	10.1
24.0	32	12.5	12.1	11.9	11.5	11.2	11.0	10.8	10.6

(℃ DB) : Dry Bulb Temperature (℃)

(℃ WB) : Wet Bulb Temperature (℃)

HEATING CAPACITY(kW)

Indoor inlet temperature（℃）	Outdoor temperature（℃ DB）						
(℃ DB)	-15.0	-10.0	-5.0	0.0	6.0	10.0	15.0
16.0	9.0	9.3	10.7	10.5	10.9	11.3	11.6
18.0	8.7	8.9	10.4	10.0	10.5	10.8	11.2
20.0	8.4	8.7	9.1	9.5	9.9	10.5	10.8
21.0	8.3	8.5	8.9	9.3	9.8	10.3	10.5
22.0	8.1	8.3	8.7	9.2	9.6	10.0	10.2
24.0	7.8	8.1	8.5	8.9	9.4	9.8	10.0
26.0	7.5	7.8	8.3	8.6	9.2	9.5	9.7

(℃ DB) : Dry Bulb Temperature (℃)

(℃ WB) : Wet Bulb Temperature (℃)

36K（3-Phase）

COOLING CAPACITY(kW)

Indoor inlet temperature（℃）		Outdoor temperature（℃ DB）							
(℃ WB)	(℃ DB)	-15	15	20	25	32	35	40	43
14.0	20	10.5	10.4	10.2	9.9	9.6	9.3	8.6	8.3
16.0	22	10.8	10.7	10.5	10.3	10.0	9.7	8.9	8.7
18.0	25	11.1	11.0	10.8	10.6	10.4	10.2	9.6	9.2
19.0	27	11.4	11.3	11.1	10.9	10.7	10.5	9.9	9.4
19.5	27	11.7	11.6	11.4	11.2	10.9	10.7	10.2	9.6
22.0	30	12.2	12.1	11.9	11.7	11.5	11.3	10.7	10.2
24.0	32	12.7	12.6	12.5	12.3	12.1	11.8	11.4	10.7

(℃ DB) : Dry Bulb Temperature (℃)

(℃ WB) : Wet Bulb Temperature (℃)

4. CAPACITIES AND SELECTION DATA

HEATING CAPACITY(kW)

Indoor inlet temperature（℃）	Outdoor temperature（℃ DB）						
(℃ DB)	-15.0	-10.0	-5.0	0.0	6.0	10.0	15.0
16.0	9.6	10.3	10.7	11.5	11.9	12.3	12.6
18.0	9.4	9.9	10.4	11.0	11.5	11.8	12.2
20.0	9.1	9.6	10.1	10.7	11.2	11.5	11.8
21.0	8.7	9.1	9.7	10.3	11.0	11.3	11.5
22.0	8.4	8.6	9.2	10.0	10.8	11.0	11.2
24.0	7.8	8.1	8.8	9.7	10.5	10.8	11.0
26.0	7.5	7.8	8.6	9.3	10.2	10.5	10.7

(℃ DB) : Dry Bulb Temperature (℃)

(℃ WB) : Wet Bulb Temperature (℃)

48K

COOLING CAPACITY(kW)

Indoor inlet temperature(℃)		Outdoor temperature（℃ DB）							
(℃ WB)	(℃ DB)	-15	15	20	25	32	35	40	43
14	20	13.3	13.0	12.9	12.6	12.0	11.7	10.8	10.2
16	22	15.0	14.6	14.4	13.8	13.5	12.6	11.7	11.1
18	25	15.7	15.2	15.0	14.4	14.2	13.8	13.2	11.6
19	27	16.7	16.4	16.2	15.6	14.4	14.0	13.4	12.2
19.5	27	17.0	16.7	16.5	15.9	15.6	15.3	14.7	14.4
22	30	17.5	17.1	17.0	16.7	16.2	16.1	15.9	15.0
24	32	17.9	17.7	17.5	17.0	16.9	16.6	16.4	16.2

(℃ DB) : Dry Bulb Temperature (℃)

(℃ WB) : Wet Bulb Temperature (℃)

HEATING CAPACITY(kW)

Indoor inlet temperature（℃）	Outdoor temperature（℃ DB）						
(℃ DB)	-15	-10	-5	0	6	10	15
16	10.0	11.1	13.0	14.9	16.0	16.2	16.8
18	10.0	11.1	13.0	14.9	15.7	16.0	16.2
20	9.5	10.6	12.5	13.2	14.8	15.1	16.2
21	9.5	10.6	12.5	14.1	14.8	15.1	16.2
22	9.0	10.0	12.5	13.5	14.8	15.1	16.2
24	9.0	10.0	11.9	13.5	14.8	15.1	16.2
26	9.0	10.0	11.9	13.5	15.2	15.7	16.0

(℃ DB) : Dry Bulb Temperature (℃)

(℃ WB) : Wet Bulb Temperature (℃)

4. CAPACITIES AND SELECTION DATA

60K

COOLING CAPACITY(kW)

Indoor inlet temperature（℃）		Outdoor temperature（℃ DB）							
(℃ WB)	(℃ DB)	-15	15	20	25	32	35	40	43
14	20	15.2	14.9	14.7	14.4	13.7	13.4	12.3	11.6
16	22	17.1	16.7	16.4	15.8	15.5	14.4	13.4	12.7
18	25	18.0	17.4	17.2	16.4	16.2	15.8	15.1	13.3
19	27	19.0	18.7	18.5	17.9	16.4	16.0	15.3	13.9
19.5	27	19.4	19.0	18.8	18.2	17.9	17.5	16.8	16.4
22	30	20.0	19.6	19.5	19.0	18.5	18.4	18.2	17.2
24	32	20.5	20.2	20.0	19.4	19.3	18.9	18.7	18.5

(℃ DB) : Dry Bulb Temperature (℃)

(℃ WB) : Wet Bulb Temperature (℃)

HEATING CAPACITY(kW)

Indoor inlet temperature（℃）	Outdoor temperature（℃ DB）						
(℃ DB)	-15	-10	-5	0	6	10	15
16	11.5	12.8	14.9	17.1	18.3	18.6	19.3
18	11.5	12.8	14.9	17.1	18.0	18.3	18.6
20	10.9	12.2	14.3	15.1	17.0	17.3	18.6
21	10.9	12.2	14.3	16.2	17.0	17.3	18.6
22	10.3	11.5	14.3	15.6	17.0	17.3	18.6
24	10.3	11.5	13.7	15.6	17.0	17.3	18.6
26	10.3	11.5	13.7	15.6	17.4	18.0	18.3

(℃ DB) : Dry Bulb Temperature (℃)

(℃ WB) : Wet Bulb Temperature (℃)

Cassette

9K

COOLING CAPACITY(kW)

Indoor inlet temperature（℃）		Outdoor temperature（℃DB）							
(℃ WB)	(℃ DB)	-15	15	20	25	32	35	40	43
14.0	20	3.3	3.1	3.0	2.9	2.7	2.4	2.2	2.0
16.0	22	3.5	3.3	3.2	3.1	2.9	2.6	2.4	2.2
18.0	25	3.6	3.5	3.3	3.2	3.0	2.8	2.6	2.4
19.0	27	3.7	3.6	3.5	3.4	3.2	3.0	2.8	2.6
19.5	27	3.8	3.7	3.6	3.5	3.3	3.1	2.9	2.7
22.0	30	4.1	4.0	3.9	3.7	3.6	3.4	3.2	3.0
24.0	32	4.3	4.2	4.1	3.9	3.8	3.6	3.4	3.1

(℃ DB) : Dry Bulb Temperature (℃)

(℃ WB) : Wet Bulb Temperature (℃)

4. CAPACITIES AND SELECTION DATA

HEATING CAPACITY(kW)

Indoor inlet temperature（℃）	Outdoor temperature（℃ DB）						
(℃ DB)	-15.0	-10.0	-5.0	0.0	6.0	10.0	15.0
16.0	2.4	2.7	2.9	3.2	3.5	3.8	4.0
18.0	2.3	2.6	2.8	3.0	3.3	3.6	3.9
20.0	2.2	2.5	2.7	2.8	3.1	3.5	3.8
21.0	2.1	2.4	2.6	2.7	3.0	3.4	3.7
22.0	2.0	2.3	2.5	2.6	2.9	3.3	3.5
24.0	1.9	2.2	2.4	2.5	2.8	3.2	3.4
26.0	1.8	2.1	2.3	2.4	2.7	3.1	3.3

(℃ DB) : Dry Bulb Temperature (℃)

(℃ WB) : Wet Bulb Temperature (℃)

12K

COOLING CAPACITY(kW)

Indoor inlet temperature（℃）		Outdoor temperature（℃ DB）							
(℃ WB)	(℃ DB)	-15	15	20	25	32	35	40	43
14.0	20	3.5	3.3	3.2	3.1	2.9	2.7	2.5	2.3
16.0	22	3.7	3.5	3.4	3.3	3.2	3.0	2.7	2.5
18.0	25	3.9	3.7	3.6	3.5	3.4	3.3	2.9	2.7
19.0	27	4.1	3.9	3.8	3.7	3.6	3.5	3.2	2.9
19.5	27	4.2	3.9	3.8	3.7	3.7	3.6	3.3	3.0
22.0	30	4.3	4.2	4.1	4.0	3.9	3.8	3.5	3.2
24.0	32	4.5	4.4	4.3	4.2	4.1	4.0	3.7	3.4

(℃ DB) : Dry Bulb Temperature (℃)

(℃ WB) : Wet Bulb Temperature (℃)

HEATING CAPACITY(kW)

Indoor inlet temperature（℃）	Outdoor temperature（℃ DB）						
(℃ DB)	-15.0	-10.0	-5.0	0.0	6.0	10.0	15.0
16.0	3.0	3.3	3.6	4.0	4.2	4.5	4.7
18.0	2.8	3.0	3.3	3.7	4.0	4.3	4.5
20.0	2.6	2.8	3.1	3.5	3.8	4.1	4.3
21.0	2.4	2.7	2.9	3.4	3.7	3.9	4.1
22.0	2.2	2.5	2.7	3.2	3.4	3.7	3.9
24.0	2.0	2.3	2.5	2.9	3.3	3.5	3.7
26.0	1.9	2.1	2.3	2.7	3.0	3.3	3.5

(℃ DB) : Dry Bulb Temperature (℃)

(℃ WB) : Wet Bulb Temperature (℃)

4. CAPACITIES AND SELECTION DATA

18K

COOLING CAPACITY(kW)

Indoor inlet temperature（℃）		Outdoor temperature（℃ DB）					
(℃ WB)	(℃ DB)	20	25	32	35	40	43
14	20	4.7	4.5	4.4	4.3	3.9	3.7
16	22	4.9	4.8	4.7	4.6	4.1	3.8
18	25	5.3	5.2	5.0	4.9	4.2	3.9
19	27	5.4	5.3	5.1	5.0	4.4	4.0
19.5	27	5.6	5.4	5.2	5.1	4.5	4.2
22	30	5.8	5.7	5.4	5.3	4.8	4.5
24	32	6.0	5.8	5.5	5.4	4.9	4.5

(℃ DB) : Dry Bulb Temperature (℃)

(℃ WB) : Wet Bulb Temperature (℃)

HEATING CAPACITY(kW)

Indoor inlet temperature（℃）	Outdoor temperature（℃ DB）					
(℃ DB)	-10	-5	0	6	10	15
16	4.1	5.0	5.3	6.1	6.3	6.5
18	4.0	4.9	5.2	6.0	6.2	6.4
20	3.9	4.8	4.9	5.8	5.9	6.3
21	3.8	4.7	4.9	5.7	5.8	6.2
22	3.8	4.7	4.8	5.6	5.8	6.1
24	3.6	4.5	4.7	5.5	5.7	6.0
26	3.6	4.3	4.4	5.3	5.6	5.8

(℃ DB) : Dry Bulb Temperature (℃)

(℃ WB) : Wet Bulb Temperature (℃)

24K

COOLING CAPACITY(kW)

Indoor inlet temperature (℃)		Outdoor temperature (℃CDB)							
(℃WB)	(℃DB)	-15	15	20	25	32	35	40	43
14.0	20	7.33	7.18	6.97	6.71	6.47	6.27	6.08	5.84
16.0	22	7.63	7.48	7.26	6.98	6.74	6.53	6.34	6.08
18.0	25	7.82	7.67	7.44	7.16	6.90	6.69	6.49	6.23
19.0	27	7.46	7.31	7.24	7.17	7.03	6.89	6.68	6.48
19.5	27	8.17	8.01	7.77	7.47	7.21	6.99	6.78	6.51
22.0	30	8.58	8.41	8.17	7.85	7.57	7.34	7.12	6.84
24.0	32	8.92	8.75	8.49	8.17	7.87	7.64	7.41	7.11

(℃ DB) : Dry Bulb Temperature (℃)

(℃ WB) : Wet Bulb Temperature (℃)

4. CAPACITIES AND SELECTION DATA

HEATING CAPACITY(kW)

Indoor inlet temperature（℃）	Outdoor temperature（℃DB）						
(℃DB)	-15.0	-10.0	-5.0	0.0	6.0	10.0	15.0
16.0	6.58	6.72	6.92	7.06	7.28	7.43	7.58
18.0	6.45	6.58	6.79	6.93	7.14	7.28	7.43
20.0	6.33	6.45	6.65	6.79	7.00	7.14	7.28
21.0	6.20	6.33	6.52	6.65	6.86	7.00	7.14
22.0	6.07	6.20	6.39	6.52	6.72	6.86	6.99
24.0	5.95	6.07	6.26	6.39	6.59	6.72	6.85
26.0	5.83	5.95	6.14	6.26	6.46	6.59	6.72

(℃ DB) : Dry Bulb Temperature (℃)

(℃ WB) : Wet Bulb Temperature (℃)

36K(Single-Phase)

COOLING CAPACITY(kW)

Indoor inlet temperature（℃）		Outdoor temperature（℃DB）							
(℃WB)	(℃DB)	-15	15	20	25	32	35	40	43
14.0	20	9.57	9.38	9.11	8.76	8.45	8.19	7.95	7.63
16.0	22	9.97	9.77	9.49	9.12	8.80	8.53	8.28	7.95
18.0	25	10.21	10.01	9.72	9.35	9.01	8.74	8.48	8.14
19.0	27	9.74	9.55	9.46	9.36	9.18	9.00	8.73	8.47
19.5	27	10.67	10.46	10.15	9.76	9.41	9.13	8.86	8.50
22.0	30	11.21	10.99	10.67	10.26	9.89	9.59	9.31	8.93
24.0	32	11.65	11.42	11.09	10.67	10.29	9.98	9.68	9.29

(℃ DB) : Dry Bulb Temperature (℃)

(℃ WB) : Wet Bulb Temperature (℃)

HEATING CAPACITY(kW)

Indoor inlet temperature (℃)	Outdoor temperature (℃DB)						
(℃DB)	-15.0	-10.0	-5.0	0.0	6.0	10.0	15.0
16.0	8.49	8.84	9.21	9.60	9.89	10.09	10.29
18.0	8.32	8.67	9.03	9.41	9.70	9.89	10.09
20.0	8.16	8.50	8.86	9.22	9.51	9.70	9.89
21.0	8.00	8.33	8.68	9.04	9.32	9.51	9.70
22.0	7.84	8.16	8.51	8.86	9.13	9.32	9.50
24.0	7.68	8.00	8.33	8.68	8.95	9.13	9.31
26.0	7.53	7.84	8.17	8.51	8.77	8.95	9.13

(℃ DB) : Dry Bulb Temperature (℃)

(℃ WB) : Wet Bulb Temperature (℃)

4. CAPACITIES AND SELECTION DATA

36K(3-Phase)

COOLING CAPACITY(kW)

Indoor inlet temperature (℃)		Outdoor temperature (℃DB)							
(℃WB)	(℃DB)	-15	15	20	25	32	35	40	43
14.0	20	10.50	10.29	9.99	9.61	9.26	8.99	8.72	8.37
16.0	22	10.93	10.72	10.41	10.01	9.65	9.36	9.08	8.72
18.0	25	11.20	10.98	10.66	10.25	9.89	9.59	9.30	8.93
19.0	27	10.68	10.48	10.37	10.27	10.07	9.87	9.57	9.29
19.5	27	11.70	11.47	11.13	10.71	10.32	10.01	9.71	9.32
22.0	30	12.29	12.05	11.70	11.25	10.85	10.52	10.20	9.80
24.0	32	12.78	12.53	12.16	11.70	11.28	10.94	10.61	10.19

(℃ DB) : Dry Bulb Temperature (℃)

(℃ WB) : Wet Bulb Temperature (℃)

HEATING CAPACITY(kW)

Indoor inlet temperature (℃)	Outdoor temperature (℃DB)						
(℃DB)	-15.0	-10.0	-5.0	0.0	6.0	10.0	15.0
16.0	8.49	8.84	9.21	9.60	9.89	10.09	10.29
18.0	8.32	8.67	9.03	9.41	9.70	9.89	10.09
20.0	8.16	8.50	8.86	9.22	9.51	9.70	9.89
21.0	8.00	8.33	8.68	9.04	9.32	9.51	9.70
22.0	7.84	8.16	8.51	8.86	9.13	9.32	9.50
24.0	7.68	8.00	8.33	8.68	8.95	9.13	9.31
26.0	7.53	7.84	8.17	8.51	8.77	8.95	9.13

(℃ DB) : Dry Bulb Temperature (℃)

(℃ WB) : Wet Bulb Temperature (℃)

48K

COOLING CAPACITY(kW)

Indoor inlet temperature (℃)		Outdoor temperature (℃DB)							
(℃WB)	(℃DB)	-15	15	20	25	32	35	40	43
14.0	20	12.91	12.66	12.29	11.81	11.39	11.05	10.72	10.29
16.0	22	13.45	13.18	12.80	12.31	11.87	11.51	11.17	10.72
18.0	25	13.78	13.51	13.11	12.61	12.16	11.80	11.44	10.98
19.0	27	13.14	12.88	12.76	12.63	12.38	12.14	11.78	11.42
19.5	27	14.39	14.10	13.69	13.17	12.70	12.32	11.95	11.47
22.0	30	15.11	14.82	14.39	13.83	13.34	12.94	12.55	12.05
24.0	32	15.72	15.41	14.96	14.39	13.87	13.46	13.05	12.53

(℃ DB) : Dry Bulb Temperature (℃)

(℃ WB) : Wet Bulb Temperature (℃)

HEATING CAPACITY (kW)

Indoor inlet temperature (℃)	Outdoor temperature (℃DB)						
(℃DB)	-15.0	-10.0	-5.0	0.0	6.0	10.0	15.0
16.0	10.81	11.03	11.37	11.61	11.96	12.20	12.45
18.0	10.60	10.82	11.15	11.38	11.73	11.96	12.20
20.0	10.39	10.60	10.93	11.16	11.50	11.73	11.96
21.0	10.18	10.39	10.71	10.93	11.27	11.50	11.73
22.0	9.98	10.18	10.50	10.71	11.04	11.27	11.49
24.0	9.78	9.98	10.29	10.50	10.82	11.04	11.26
26.0	9.59	9.78	10.08	10.29	10.61	10.82	11.04

60K

COOLING CAPACITY(kW)

Indoor inlet temperature (℃)		Outdoor temperature（℃DB）							
(℃WB)	(℃DB)	-15	15	20	25	32	35	40	43
14.0	20	16.39	16.07	15.60	15.00	14.47	14.04	13.47	12.93
16.0	22	16.69	16.37	15.89	15.28	14.73	14.29	13.72	13.17
18.0	25	17.00	16.67	16.18	15.56	15.00	14.55	13.97	13.41
19.0	27	15.90	15.74	15.59	15.43	15.28	14.98	14.38	13.81
19.5	27	16.06	15.90	15.74	15.59	15.43	14.97	14.37	13.80
22.0	30	16.38	16.22	16.06	15.90	15.74	15.11	14.51	13.93
24.0	32	16.71	16.54	16.38	16.22	16.06	15.41	14.80	14.21

(℃ DB) : Dry Bulb Temperature (℃)

(℃ WB) : Wet Bulb Temperature (℃)

HEATING CAPACITY (kW)

Indoor inlet temperature (℃)	Outdoor temperature (℃DB)						
(℃DB)	-15.0	-10.0	-5.0	0.0	6.0	10.0	15.0
16.0	15.04	15.35	15.82	16.15	16.65	16.98	17.32
18.0	14.75	15.05	15.51	15.83	16.32	16.65	16.98
20.0	14.46	14.75	15.21	15.52	16.00	16.32	16.65
21.0	14.17	14.46	14.91	15.21	15.68	15.99	16.31
22.0	13.89	14.17	14.61	14.91	15.37	15.67	15.99
24.0	13.61	13.89	14.32	14.61	15.06	15.36	15.67
26.0	13.34	13.61	14.03	14.32	14.76	15.05	15.35

(℃ DB) : Dry Bulb Temperature (℃)

(℃ WB) : Wet Bulb Temperature (℃)

4. CAPACITIES AND SELECTION DATA

Ceiling & Floor

18K

COOLING CAPACITY(kW)

Indoor inlet temperature（℃）		Outdoor temperature（℃DB）					
(℃ WB)	(℃ DB)	20	25	32	35	40	43
14	20	4.7	4.5	4.4	4.3	3.9	3.7
16	22	4.9	4.8	4.7	4.6	4.1	3.8
18	25	5.3	5.2	5.0	4.9	4.2	3.9
19	27	5.4	5.3	5.1	5.0	4.4	4.0
19.5	27	5.6	5.4	5.2	5.1	4.5	4.2
22	30	5.8	5.7	5.4	5.3	4.8	4.5
24	32	6.0	5.8	5.5	5.4	4.9	4.5

(℃ DB) : Dry Bulb Temperature (℃)

(℃ WB) : Wet Bulb Temperature (℃)

HEATING CAPACITY(kW)

Indoor inlet temperature（℃）	Outdoor temperature（℃ DB）					
(℃ DB)	-1	-	0	6	10	15
16	3.9	4.7	5.0	5.8	6.0	6.2
18	3.8	4.6	4.9	5.7	5.9	6.1
20	3.7	4.5	4.6	5.5	5.6	6.0
21	3.6	4.4	4.6	5.4	5.5	5.9
22	3.6	4.4	4.5	5.3	5.5	5.8
24	3.4	4.2	4.4	5.2	5.4	5.7
26	3.4	4.1	4.1	5.0	5.3	5.5

(℃ DB) : Dry Bulb Temperature (℃)

(℃ WB) : Wet Bulb Temperature (℃)

24K

COOLING CAPACITY(kW)

Indoor inlet temperature（℃）		Outdoor temperature（℃ DB）						
(℃ WB)	(℃ DB)	20	25	32	35	40	43	48
14.0	20	6.7	6.3	6.3	5.6	5.5	5.4	5.4
16.0	22	7.0	6.8	6.6	6.0	5.7	5.6	5.4
18.0	25	7.3	7.0	6.7	6.3	6.0	5.8	5.5
19.0	27	7.4	7.1	6.8	6.4	6.1	6.0	5.6
19.5	27	7.5	7.3	7.0	6.6	6.3	6.2	5.8
22.0	30	7.6	7.4	7.1	6.8	6.5	6.4	5.9
24.0	32	7.7	7.5	7.2	7.0	6.6	6.5	6.0

(℃ DB) : Dry Bulb Temperature (℃)

(℃ WB) : Wet Bulb Temperature (℃)

4. CAPACITIES AND SELECTION DATA

HEATING CAPACITY(kW)

Indoor inlet temperature（℃）	Outdoor temperature（℃ DB）					
(℃ DB)	-10.	-5.	0.0	6.0	10.0	15.0
16.0	5.5	6.0	6.3	7.2	7.3	7.4
18.0	5.4	5.8	6.2	7.1	7.2	7.2
20.0	5.3	5.5	5.9	6.9	7.1	7.1
21.0	5.2	5.4	5.8	6.8	7.0	7.0
22.0	5.0	5.3	5.7	6.7	6.9	6.9
24.0	4.9	5.1	5.6	6.5	6.8	6.8
26.0	4.8	5.0	5.5	6.4	6.6	6.7

(℃ DB) : Dry Bulb Temperature (℃)

(℃ WB) : Wet Bulb Temperature (℃)

36K(Single-Phase)

COOLING CAPACITY(kW)

Indoor inlet temperature（℃）		Outdoor temperature（℃ DB）							
(℃ WB)	(℃ DB)	-15	15	20	25	32	35	40	43
14.0	20	10.3	10.2	10.1	9.9	9.4	9.1	8.7	8.3
16.0	22	10.5	10.4	10.3	10.1	9.6	9.3	9.1	8.7
18.0	25	10.7	10.6	10.5	10.3	9.9	9.5	9.3	9.1
19.0	27	10.9	10.8	10.7	10.5	10.1	9.7	9.5	9.3
19.5	27	11.1	10.9	10.8	10.6	10.2	9.8	9.6	9.3
22.0	30	11.5	11.2	11.1	10.8	10.5	10.2	10.0	9.7
24.0	32	11.9	11.6	11.5	11.3	10.9	10.7	10.5	10.1

(℃ DB) : Dry Bulb Temperature (℃)

(℃ WB) : Wet Bulb Temperature (℃)

HEATING CAPACITY(kW)

Indoor inlet temperature（℃）	Outdoor temperature（℃ DB）						
(℃ DB)	-15.	-10.	-5.	0.0	6.0	10.0	15.0
16.0	9.0	9.3	10.7	10.5	10.9	11.3	11.6
18.0	8.7	8.9	10.4	10.0	10.5	10.8	11.2
20.0	8.4	8.7	9.1	9.5	10.3	10.5	10.8
21.0	8.3	8.5	8.9	9.3	9.8	10.3	10.5
22.0	8.1	8.3	8.7	9.2	9.6	10.0	10.2
24.0	7.8	8.1	8.5	8.9	9.4	9.8	10.0
26.0	7.5	7.8	8.3	8.6	9.2	9.5	9.7

(℃ DB) : Dry Bulb Temperature (℃)

(℃ WB) : Wet Bulb Temperature (℃)

4. CAPACITIES AND SELECTION DATA

36K(3-Phase)

COOLING CAPACITY(kW)

Indoor inlet temperature（℃）		Outdoor temperature（℃ DB）							
(℃ WB)	(℃ DB)	-15	15	20	25	32	35	40	43
14.0	20	10.5	10.4	10.2	9.9	9.6	9.3	8.6	8.3
16.0	22	10.8	10.7	10.5	10.3	10.0	9.7	8.9	8.7
18.0	25	11.1	11.0	10.8	10.6	10.4	10.2	9.6	9.2
19.0	27	11.4	11.3	11.1	10.9	10.7	10.5	9.9	9.4
19.5	27	11.7	11.6	11.4	11.2	10.9	10.7	10.2	9.6
22.0	30	12.2	12.1	11.9	11.7	11.5	11.3	10.7	10.2
24.0	32	12.7	12.6	12.5	12.3	12.1	11.8	11.4	10.7

(℃ DB) : Dry Bulb Temperature (℃)

(℃ WB) : Wet Bulb Temperature (℃)

HEATING CAPACITY(kW)

Indoor inlet temperature（℃）	Outdoor temperature（℃ DB）						
(℃ DB)	-15.0	-10.0	-5.0	0.0	6.0	10.0	15.0
16.0	9.6	10.3	10.7	11.5	11.9	12.3	12.6
18.0	9.4	9.9	10.4	11.0	11.5	11.8	12.2
20.0	9.1	9.6	10.1	10.7	11.2	11.5	11.8
21.0	8.7	9.1	9.7	10.3	11.0	11.3	11.5
22.0	8.4	8.6	9.2	10.0	10.8	11.0	11.2
24.0	7.8	8.1	8.8	9.7	10.5	10.8	11.0
26.0	7.5	7.8	8.6	9.3	10.2	10.5	10.7

(℃ DB) : Dry Bulb Temperature (℃)

(℃ WB) : Wet Bulb Temperature (℃)

48K

COOLING CAPACITY(kW)

Indoor inlet temperature（℃）		Outdoor temperature（℃DB）							
(℃ WB)	(℃ DB)	-15	15	20	25	32	35	40	43
14	20	13.3	13.0	12.9	12.6	12.0	11.7	10.8	10.2
16	22	15.0	14.6	14.4	13.8	13.5	12.6	11.7	11.1
18	25	15.7	15.2	15.0	14.4	14.2	13.8	13.2	11.6
19	27	16.7	16.4	16.2	15.6	14.4	14.0	13.4	12.2
19.5	27	17.0	16.7	16.5	15.9	15.6	15.3	14.7	14.4
22	30	17.5	17.1	17.0	16.7	16.2	16.1	15.9	15.0
24	32	17.9	17.7	17.5	17.0	16.9	16.6	16.4	16.2

(℃ DB) : Dry Bulb Temperature (℃)

(℃ WB) : Wet Bulb Temperature (℃)

4. CAPACITIES AND SELECTION DATA

HEATING CAPACITY(kW)

Indoor inlet temperature (℃)	Outdoor temperature (℃ DB)						
(℃ DB)	-15	-10	-5	0	6	10	15
16	10.6	11.7	13.7	15.7	16.8	17.1	17.7
18	10.6	11.7	13.7	15.7	16.5	16.8	17.1
20	10.0	11.2	13.1	13.9	15.6	15.9	17.1
21	10.0	11.2	13.1	14.8	15.6	15.9	17.1
22	9.5	10.6	13.1	14.3	15.6	15.9	17.1
24	9.5	10.6	12.6	14.3	15.6	15.9	17.1
26	9.5	10.6	12.6	14.3	16.0	16.5	16.8

(℃ DB) : Dry Bulb Temperature (℃)

(℃ WB) : Wet Bulb Temperature (℃)

60K

COOLING CAPACITY(kW)

Indoor inlet temperature (℃)		Outdoor temperature (℃ DB)							
(℃ WB)	(℃ DB)	-15	15	20	25	32	35	40	43
14	20	15.2	14.9	14.7	14.4	13.7	13.4	12.3	11.6
16	22	17.1	16.7	16.4	15.8	15.5	14.4	13.4	12.7
18	25	18.0	17.4	17.2	16.4	16.2	15.8	15.1	13.3
19	27	19.0	18.7	18.5	17.9	16.4	16.0	15.3	13.9
19.5	27	19.4	19.0	18.8	18.2	17.9	17.5	16.8	16.4
22	30	20.0	19.6	19.5	19.0	18.5	18.4	18.2	17.2
24	32	20.5	20.2	20.0	19.4	19.3	18.9	18.7	18.5

(℃ DB) : Dry Bulb Temperature (℃)

(℃ WB) : Wet Bulb Temperature (℃)

HEATING CAPACITY(kW)

Indoor inlet temperature (℃)	Outdoor temperature (℃ DB)						
(℃ DB)	-15	-10	-5	0	6	10	15
16	11.9	13.2	15.4	17.6	18.9	19.2	19.8
18	11.9	13.2	15.4	17.6	18.6	18.9	19.2
20	11.2	12.5	14.7	15.6	17.5	17.8	19.2
21	11.2	12.5	14.7	16.7	17.5	17.8	19.2
22	10.6	11.9	14.7	16.0	17.5	17.8	19.2
24	10.6	11.9	14.1	16.0	17.5	17.8	19.2
26	10.6	11.9	14.1	16.0	17.9	18.6	18.9

(℃ DB) : Dry Bulb Temperature (℃)

(℃ WB) : Wet Bulb Temperature (℃)

4.2 Piping length correction factor

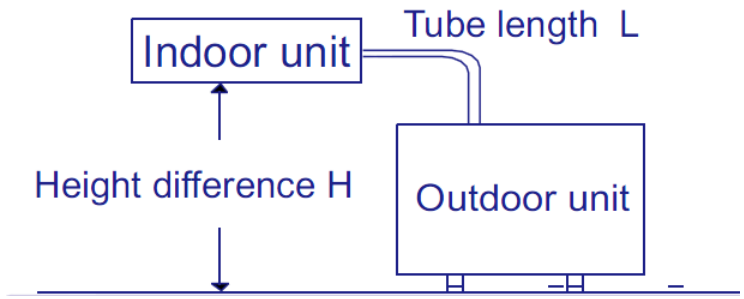

The correction factor is based on the equivalent piping length in meters (EL) and the height between outdoor and indoor units in meters (H).

H:

Height between indoor unit and outdoor unit (m).

• H>0: Position of outdoor unit is higher than position of indoor unit (m).

• H<0: Position of outdoor unit is lower than position of indoor unit (m).

L:

Actual one-way piping length between indoor unit and outdoor unit (m).

EL:

Equivalent one-way piping length between indoor unit and outdoor unit (m).

Gas Diameter （mm）	9.52	12.7	15.88	19.05
90° Elbow	0.15	0.2	0.25	0.35

Cooling ：

Model \ EL	5m	7.5m	10m	15m	20m	25m	30m	35m	40m	45m	50m
9K/12K/18K	1.0	——	0.98	0.96	0.94	——	——	——	——	——	——
24K	1.0	——	0.98	0.96	0.94	0.91	0.88	——	——	——	——
36K	1.0	——	0.98	0.96	0.94	0.92	0.90	——	——	——	——
48K	——	1.0	0.98	0.96	0.93	0.91	0.88	0.85	0.81	0.78	0.76
60K	——	1.0	0.98	0.96	0.94	0.92	0.89	0.86	0.83	0.79	0.75

4. CAPACITIES AND SELECTION DATA

Heating：

EL / Model	5m	7.5m	10m	15m	20m	25m	30m	35m	40m	45m	50m
9K/12K/18K	1.0	—	0.97	0.94	0.91	——	—	—	—	——	—
24K	1.0	—	0.99	0.98	0.97	0.96	0.95	—	—	——	—
36K	1.0	—	0.99	0.98	0.97	0.96	0.95	—	—	——	—
48K	——	1.0	0.96	0.94	0.91	0.88	0.85	0.82	0.78	0.75	0.72
60K	——	1.0	0.99	0.98	0.97	0.95	0.93	0.90	0.87	0.84	0.80

The correction factor of height between indoor unit and outdoor unit

Hight difference	5m	10m	15m	20m	25m	30m
Factor	0.01	0.015	0.02	0.025	0.03	0.04

In order to ensure correct unit selection, consider the fartest indoor unit.

NOTE

1. Data above is assuming a height difference between indoor and outdoor of 0m.
2. Be sure to minimize length of connection pipes in order to optimize performance. In the case that the outdoor unit is installed lower than the indoor unit, it is necessary to apply height correction factor additional to length correction factor to calculate cooling. If outdoor unit is higher,height correction factor is not necessary to calculate.

4.3 Correction factors according to defrosting operation

The heating capacity in the preceding paragraph, excludes the condition of the frost or the defrosting operation period. In consideration of the frost or the defrosting operation, the heating capacity is corrected by the equation below.

Corrected heating capacity = Defrost Correction factor x unit capacity

OUTDOOR TEMPERATURE (°CDB)	-15	-10	-5	0	7	10	15
Correction factor (humidity rate85% RH)	0.95	0.95	0.91	0.81	1.0	1.0	1.0

Correction Factor

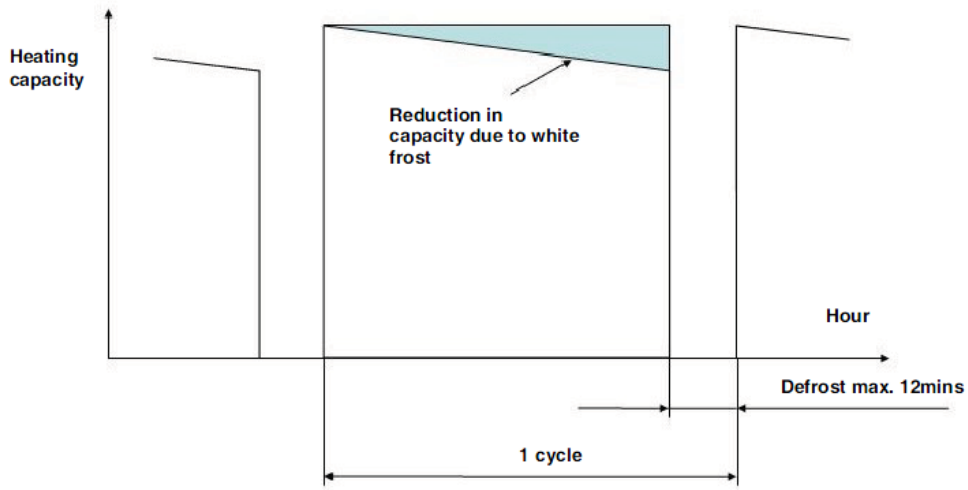

NOTE:
The correction factor is not valid for special conditions such as snowfall or operation in a transitional period.

5. Sound pressure data

Duct type

Model	9K/12K
Test condition	1.4m under the unit; 1.0m high from the ground

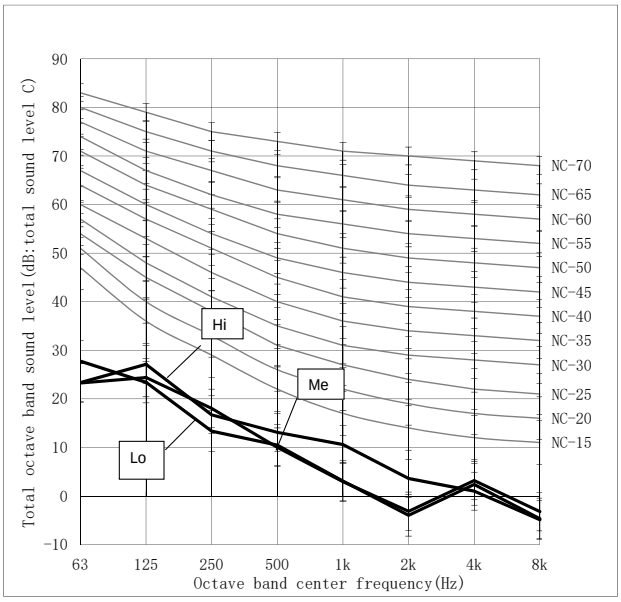

Model	18K
Test condition	1.4m under the unit; 1.0m high from the ground

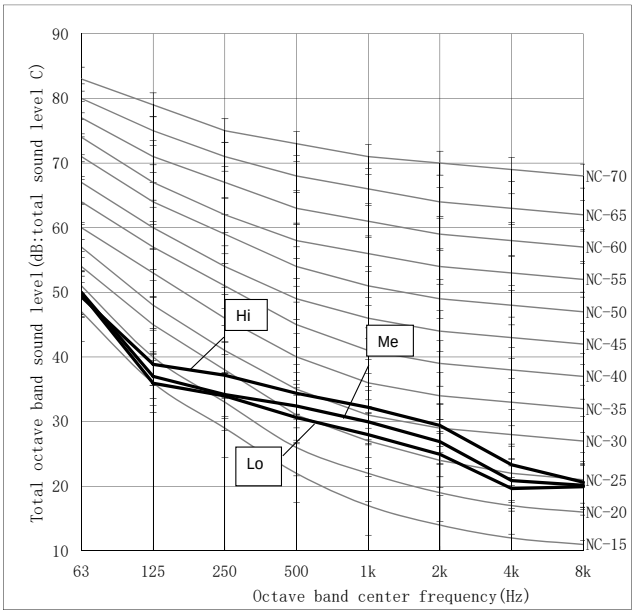

Model	24K
Test condition	1.4m under the unit; 1.0m high from the ground

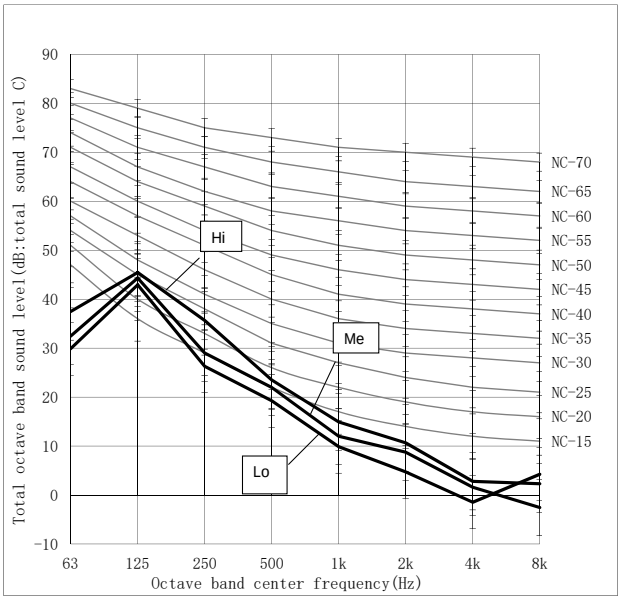

Model	36K
Test condition	1.4m under the unit; 1.0m high from the ground

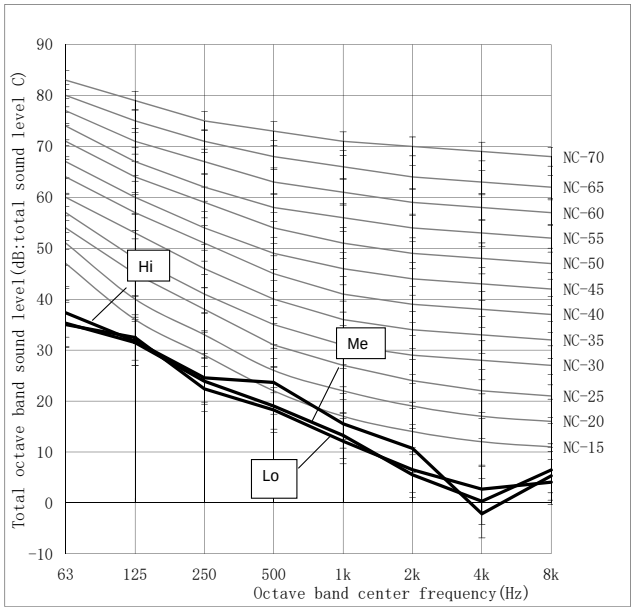

5. SOUND PRESSURE DATA

Model	48K
Test condition	1.4m under the unit; 1.0m high from the ground

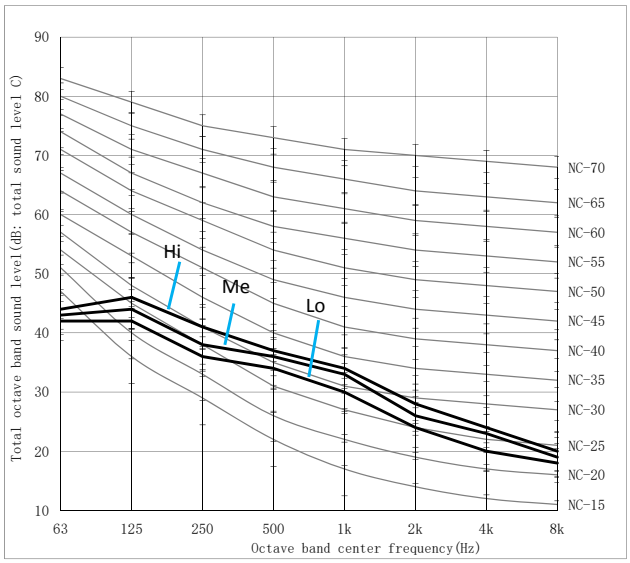

Model	60K
Test condition	1.4m under the unit; 1.0m high from the ground

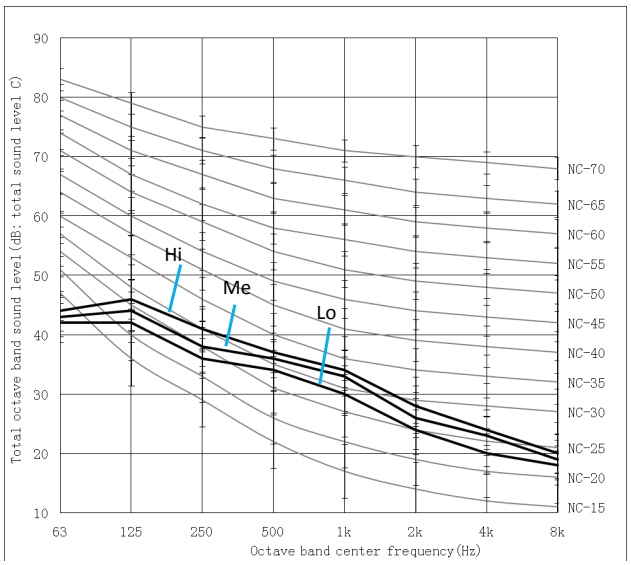

5. SOUND PRESSURE DATA

Cassette type

Model	9K/12K
Test condition	1.4m under the unit; 1.0m high from the ground

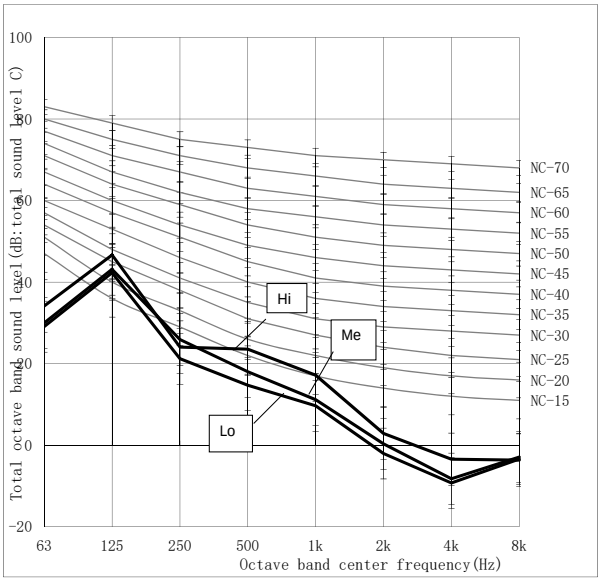

Model	18K
Test condition	1.4m under the unit; 1.0m high from the ground

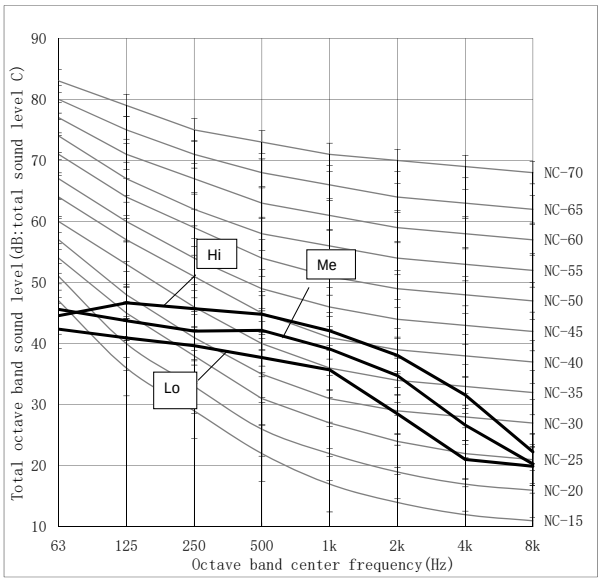

Model	24K
Test condition	1.4m under the unit; 1.0m high from the ground

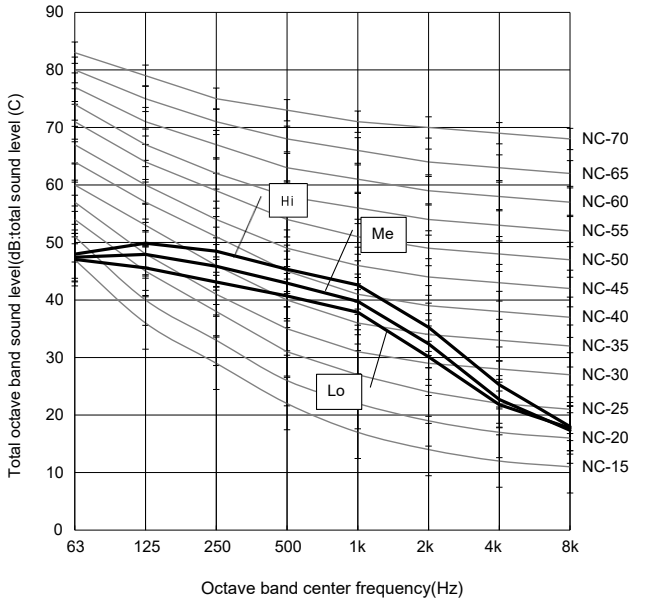

Model	36K
Test condition	1.4m under the unit; 1.0m high from the ground

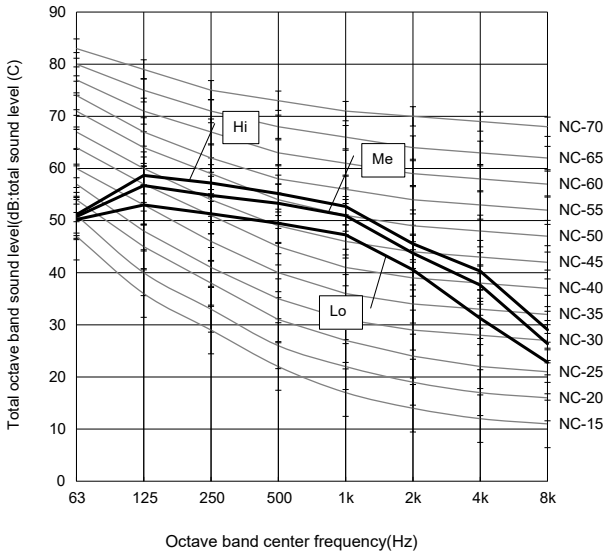

5. SOUND PRESSURE DATA

Model	48K/60K
Test condition	1.4m under the unit; 1.0m high from the ground

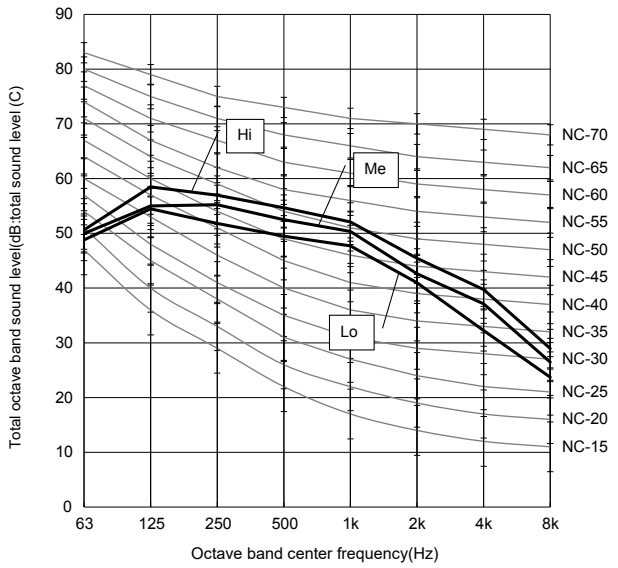

5. SOUND PRESSURE DATA

Ceiling & Floor

Model	18K
Test condition	1.0m ahead of the unit; 1.0m under the unit; 1.0m high from the ground

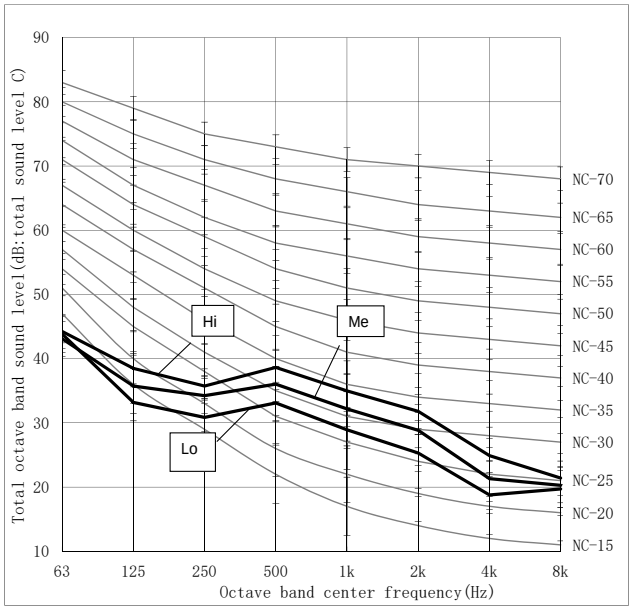

Model	24K
Test condition	1.0m ahead of the unit; 1.0m under the unit; 1.0m high from the ground

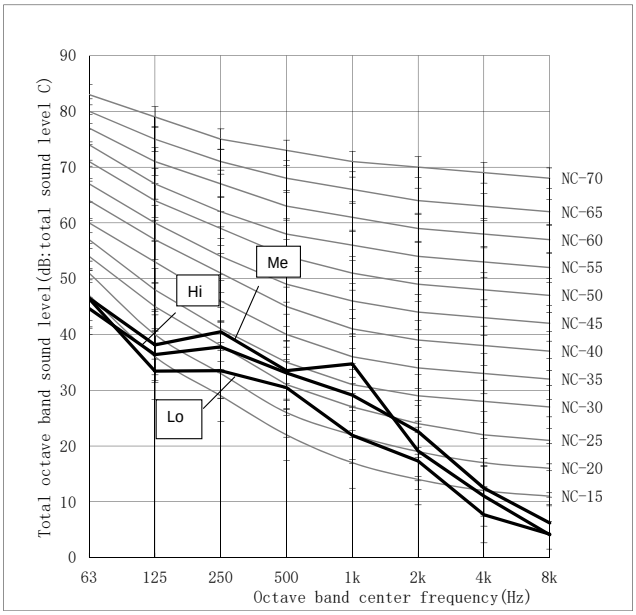

Model	36K
Test condition	1.0m ahead of the unit; 1.0m under the unit; 1.0m high from the ground

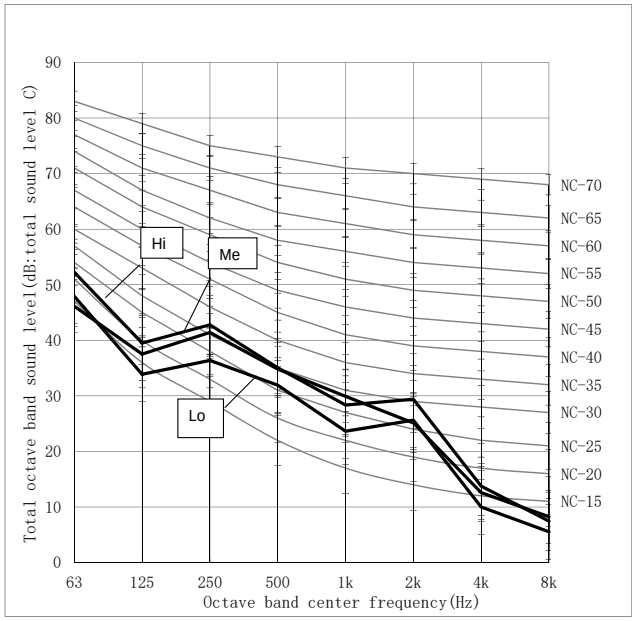

Model	48K/60K
Test condition	Under the unit 1.0m

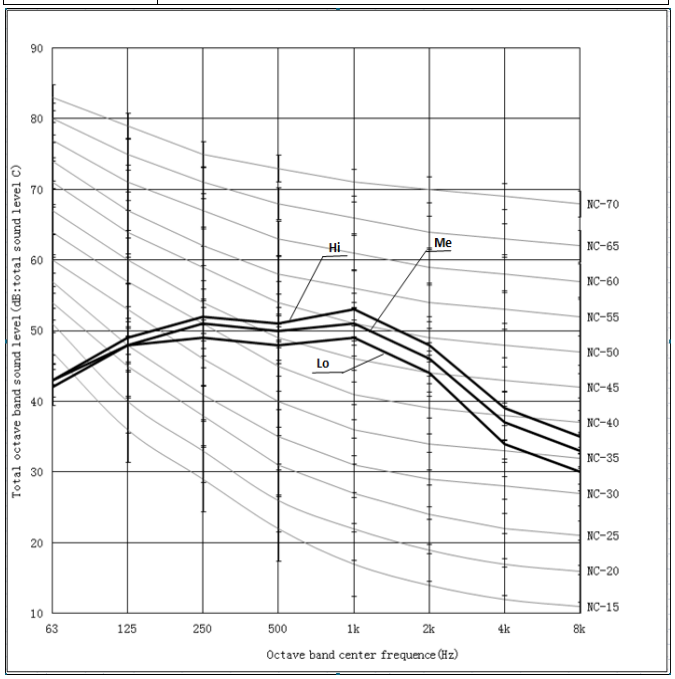

5. SOUND PRESSURE DATA

Outdoor unit

Model	9K/12K
Test condition	1.0m ahead of the unit; 0.74m high from the bottom of the unit; 1.0m high from the ground

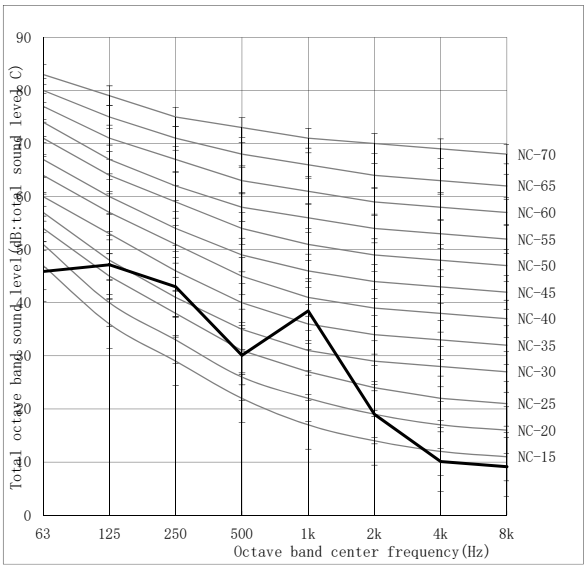

Model	18K
Test condition	1.0m ahead of the unit; 0.79m high from the bottom of the unit; 1.0m high from the ground

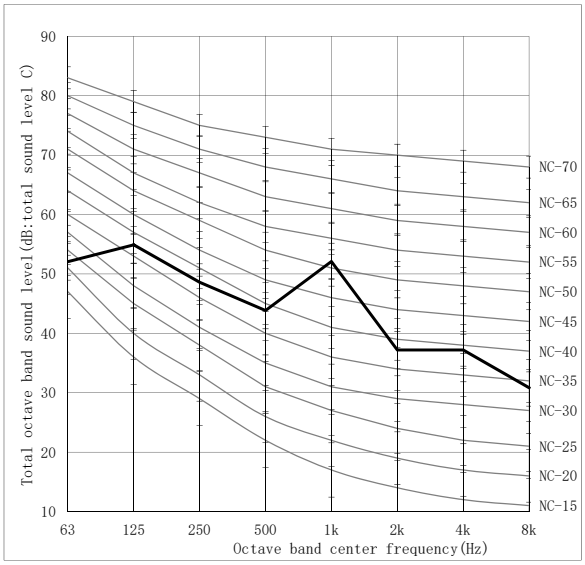

Model	24K
Test condition	1.0m ahead of the unit; 0.83m high from the bottom of the unit; 1.0m high from the ground

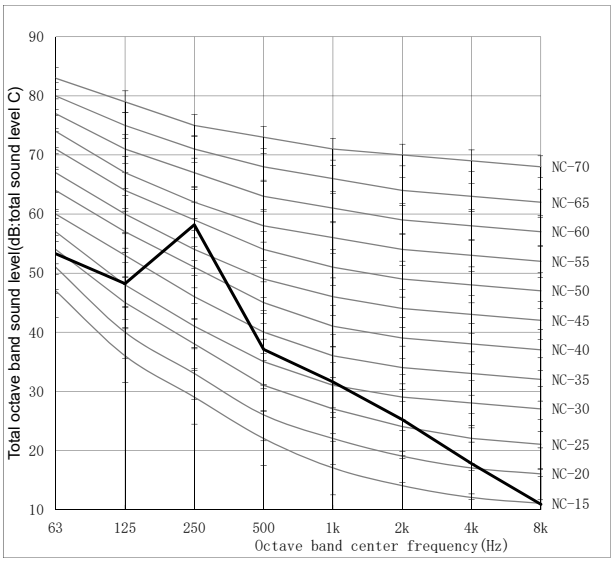

Model	36K(Single-Phase)
Test condition	Front unit 1.5m

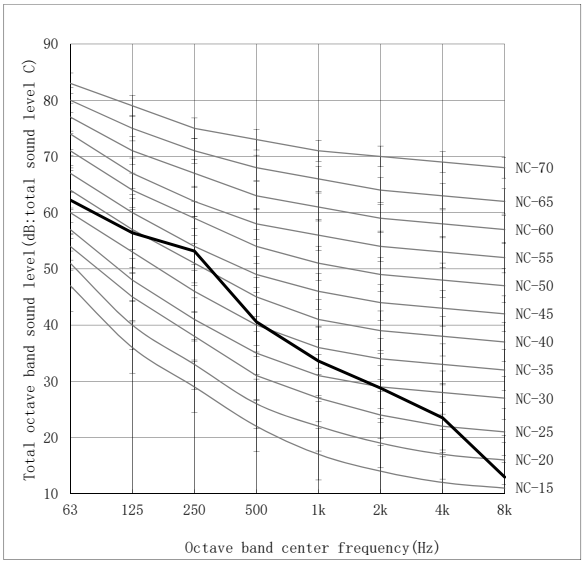

5. SOUND PRESSURE DATA

Model	36K(3-Phase)
Test condition	1.0m ahead of the unit; 0.9m high from the bottom of the unit; 1.0m high from the ground

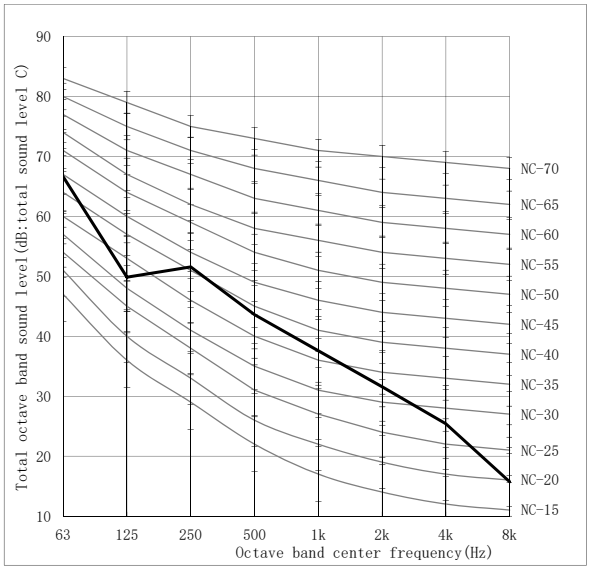

Model	48K
Test condition	1.0m ahead of the unit; 1.0m high from the bottom of the unit;

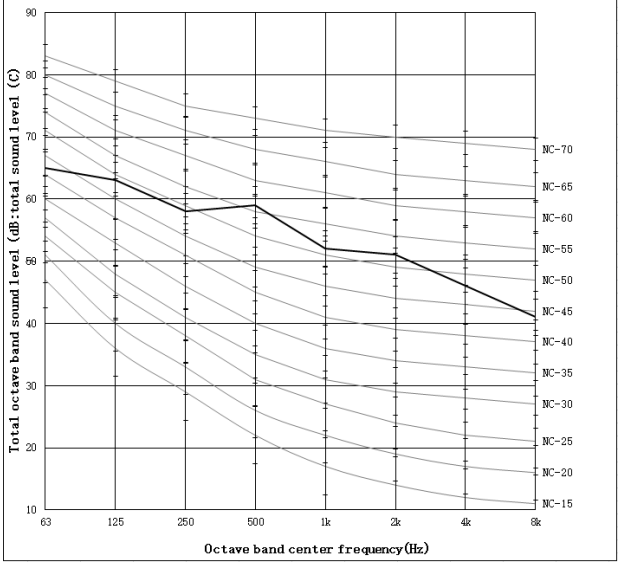

Model	60K
Test condition	1.0m ahead of the unit; 1.2m high from the bottom of the unit;

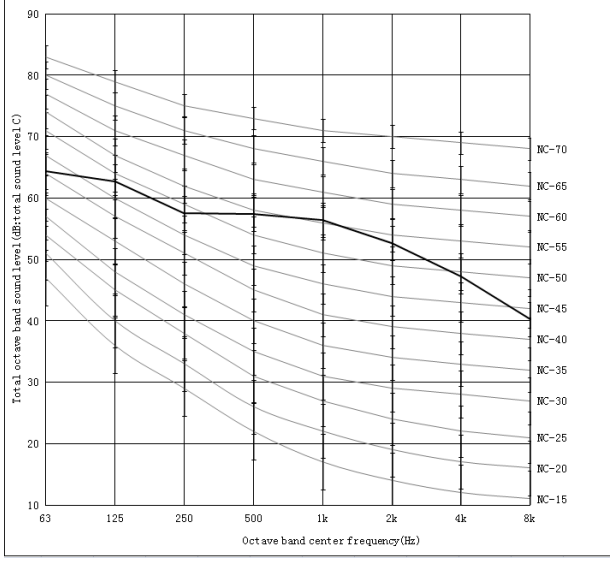

6. Air flow distribution (Cassette type)

Cooling-Velocity

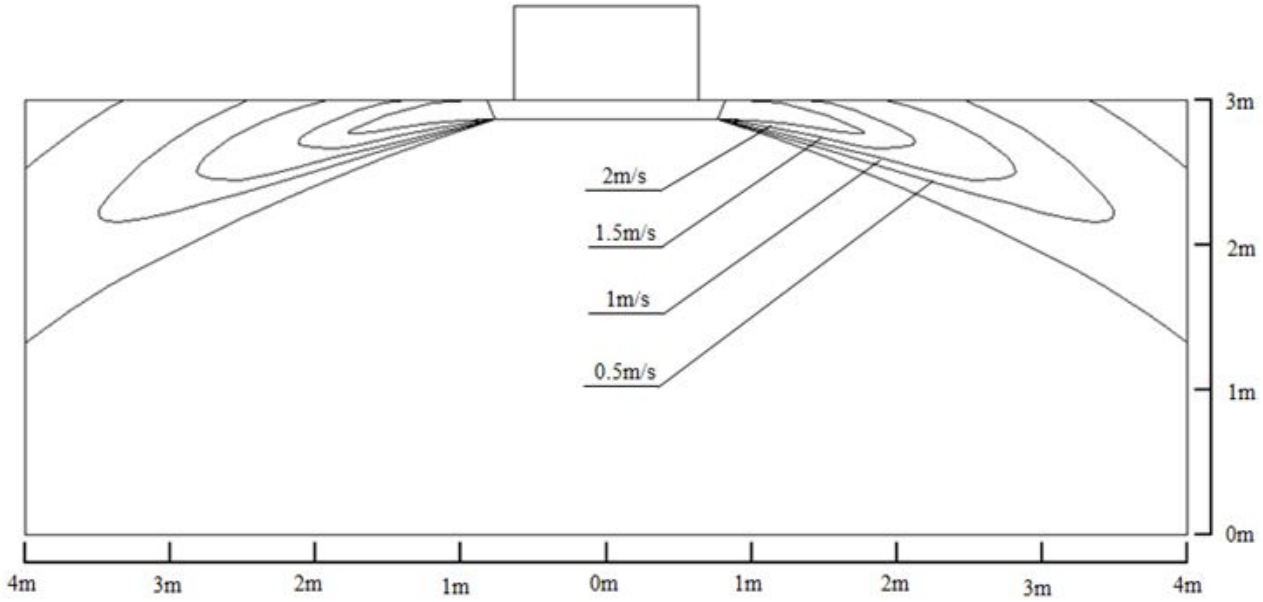

Cooling-Temperature

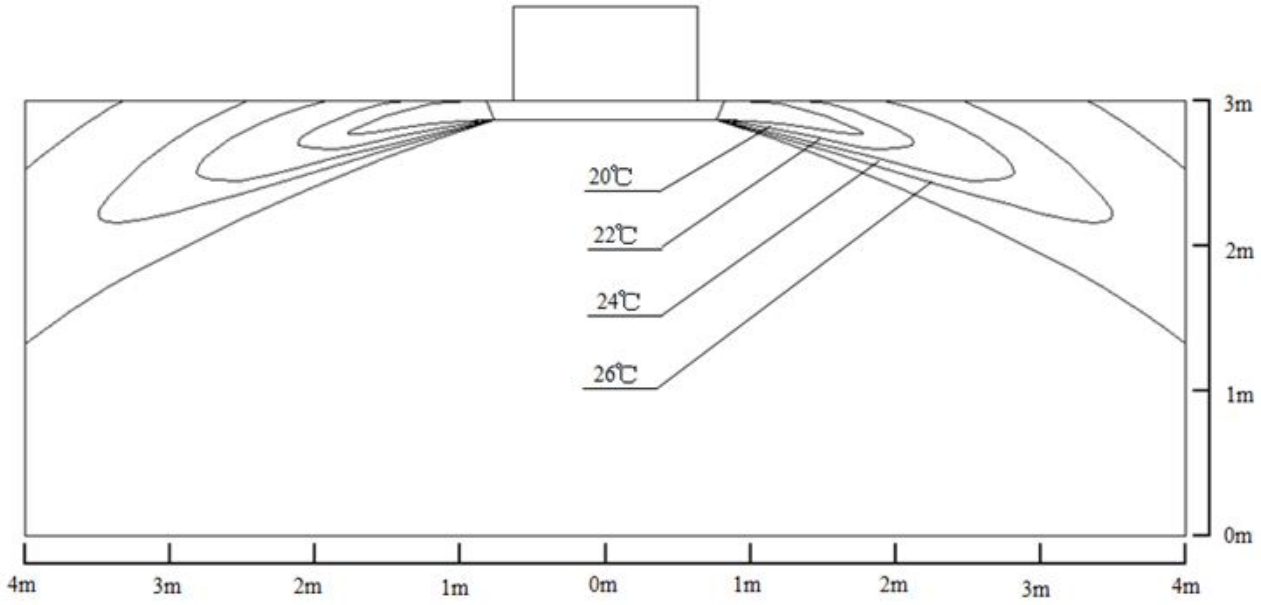

6. AIR FLOW DISTRIBUTION

Heating-Velocity

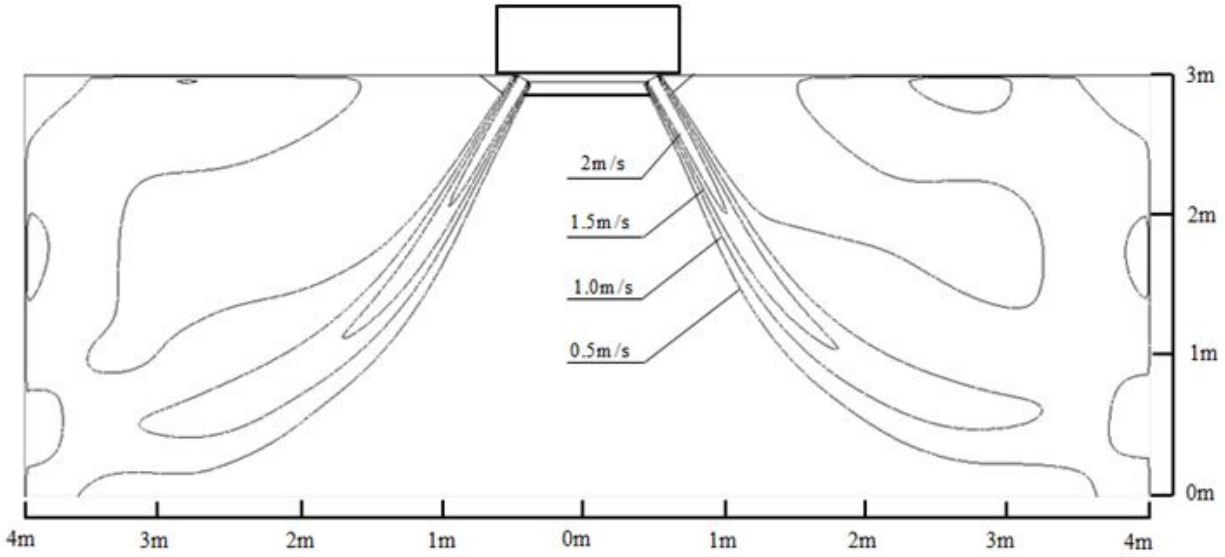

Heating-Temperature

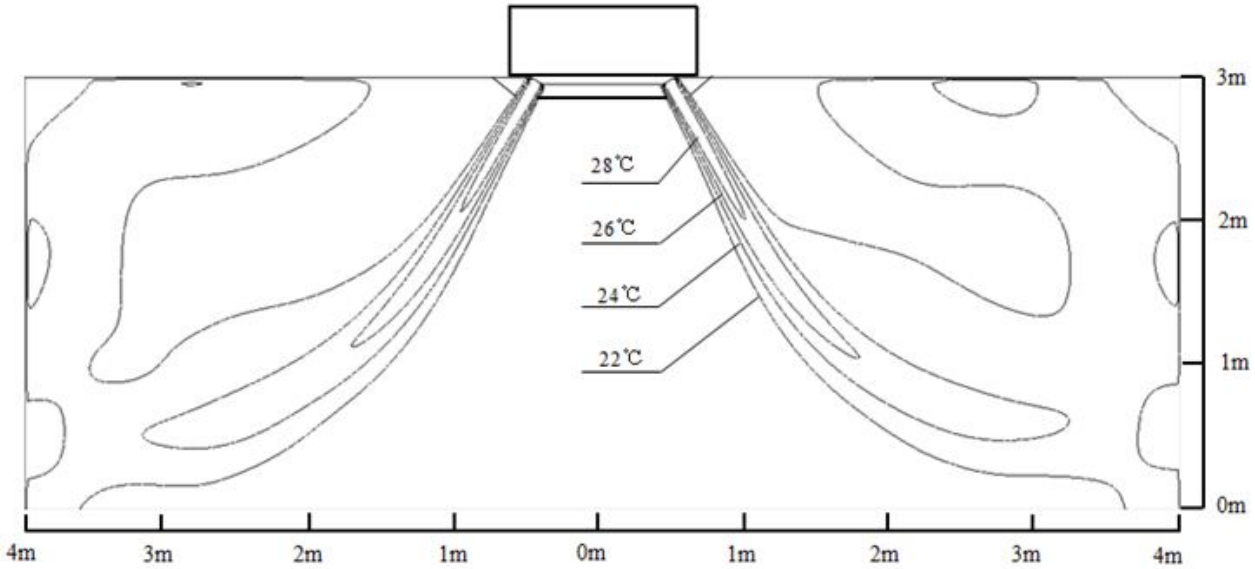

7. ESP (External static pressure) Chart (Duct type)

9K

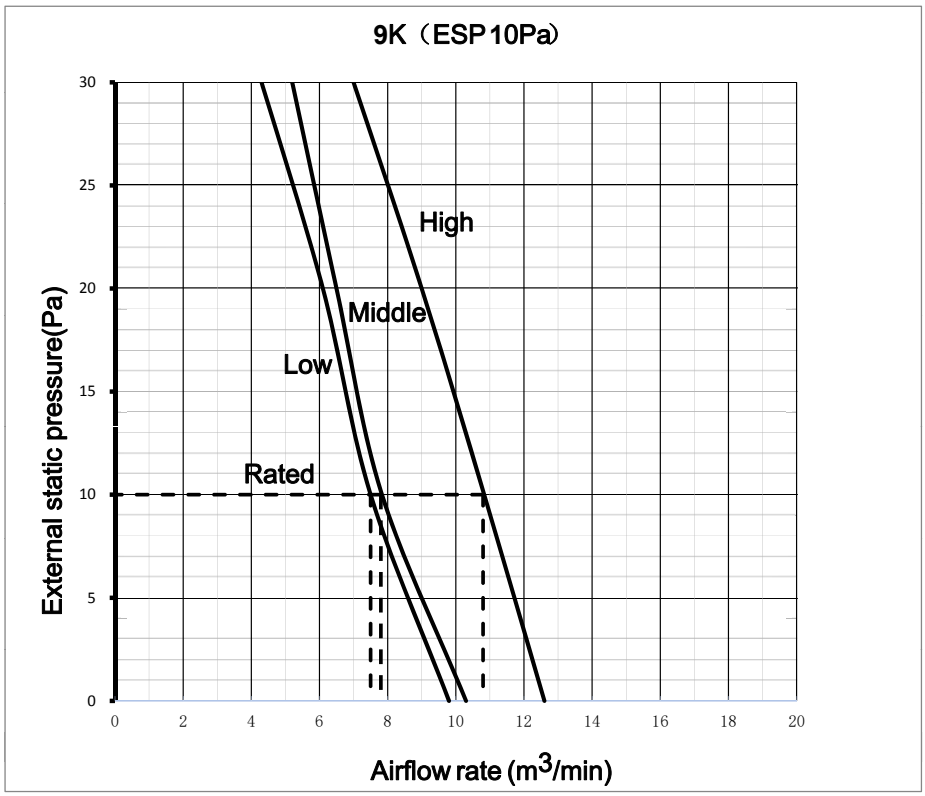

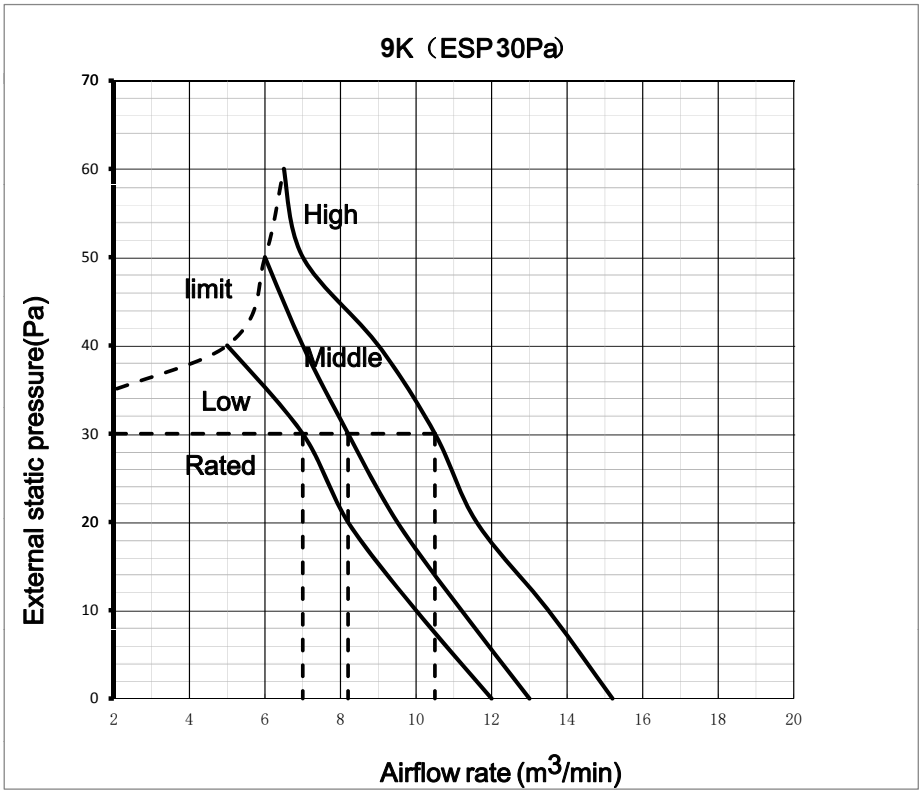

7. ESP (EXTERNAL STATIC PRESSURE) CHART (DUCT TYPE)

12K

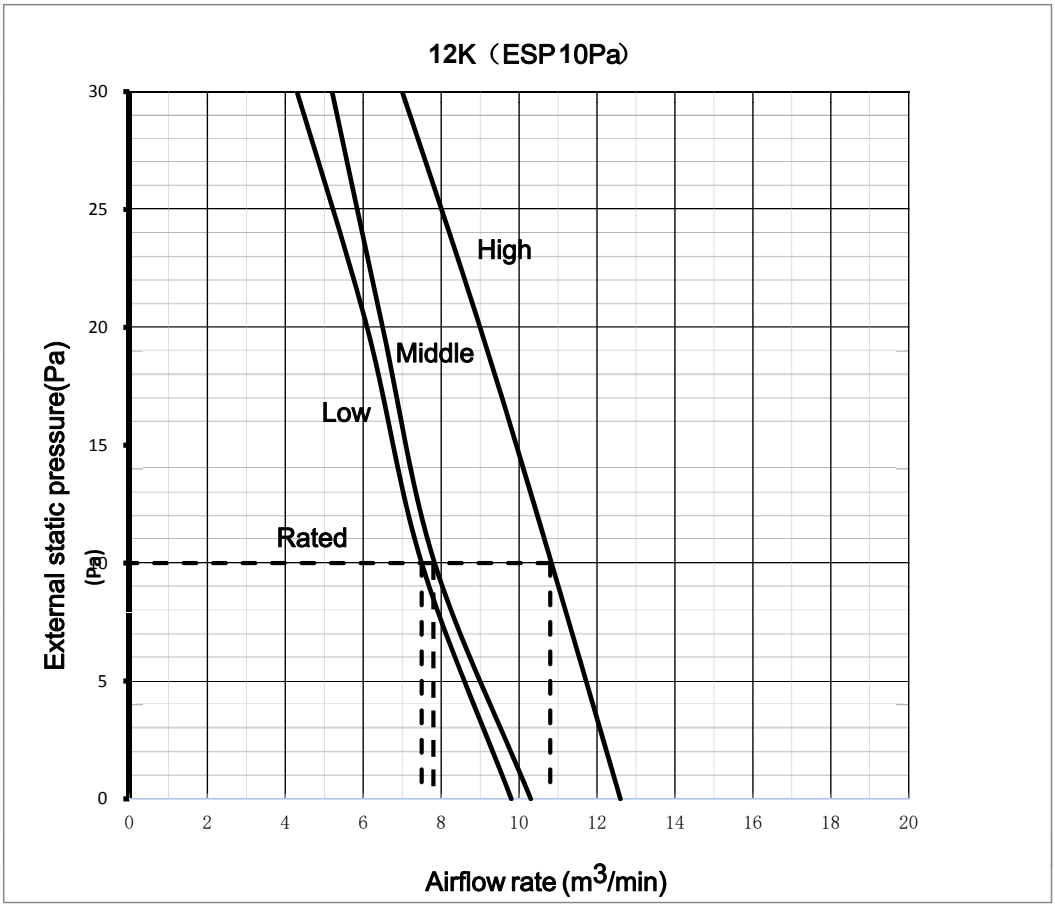

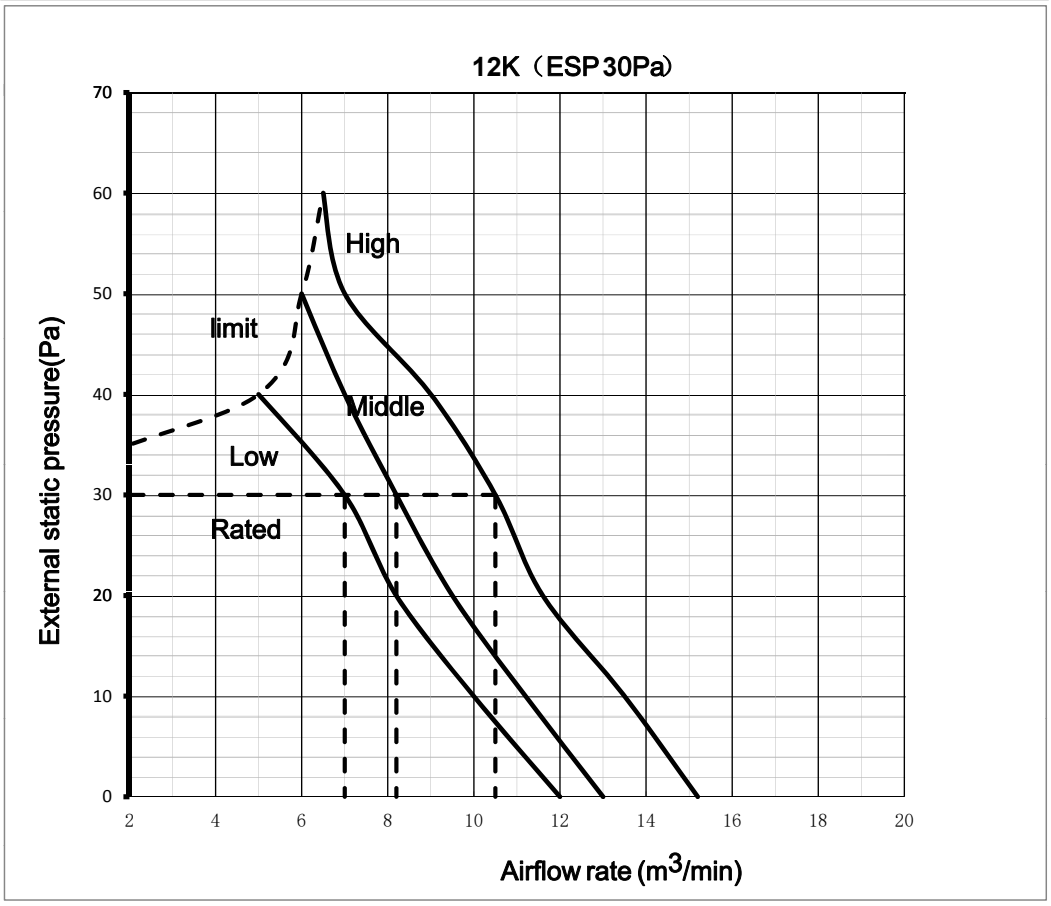

7. ESP (EXTERNAL STATIC PRESSURE) CHART (DUCT TYPE)

18K

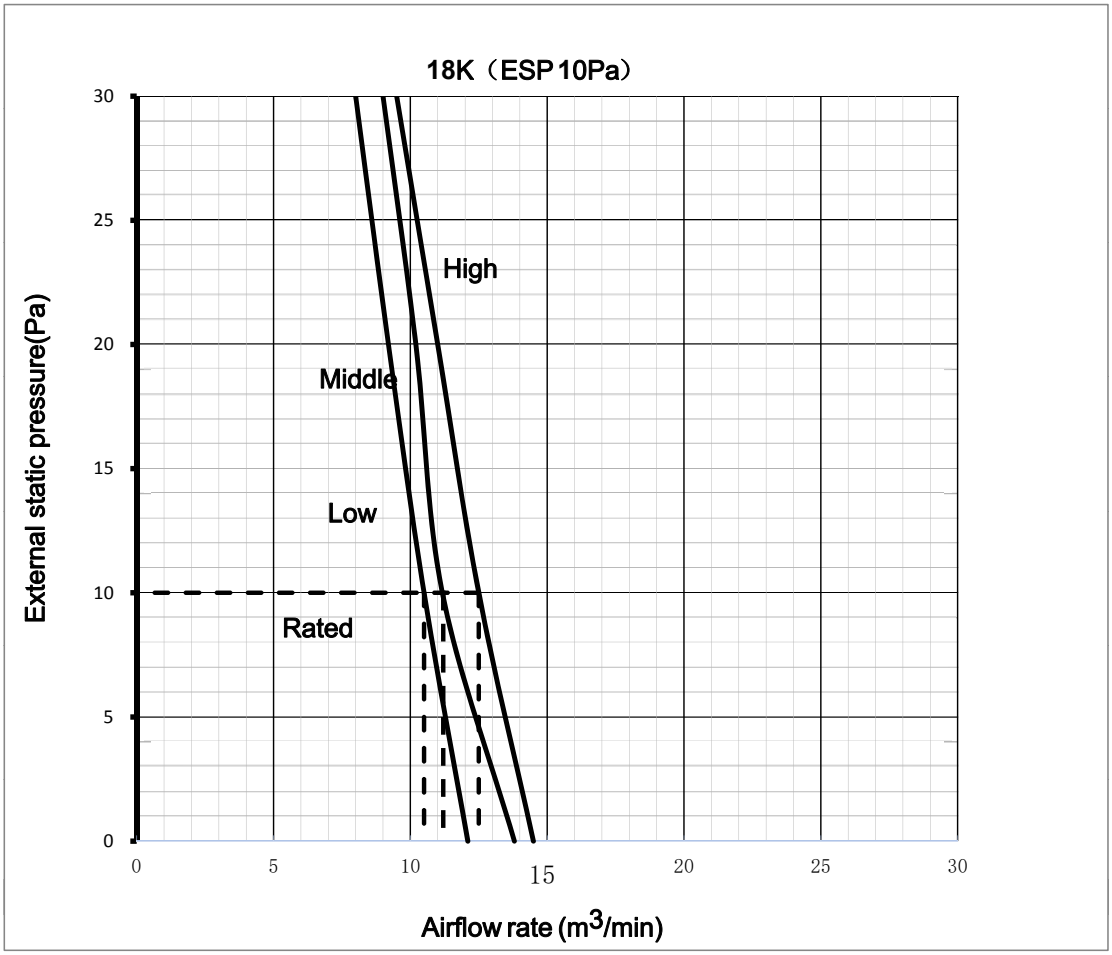

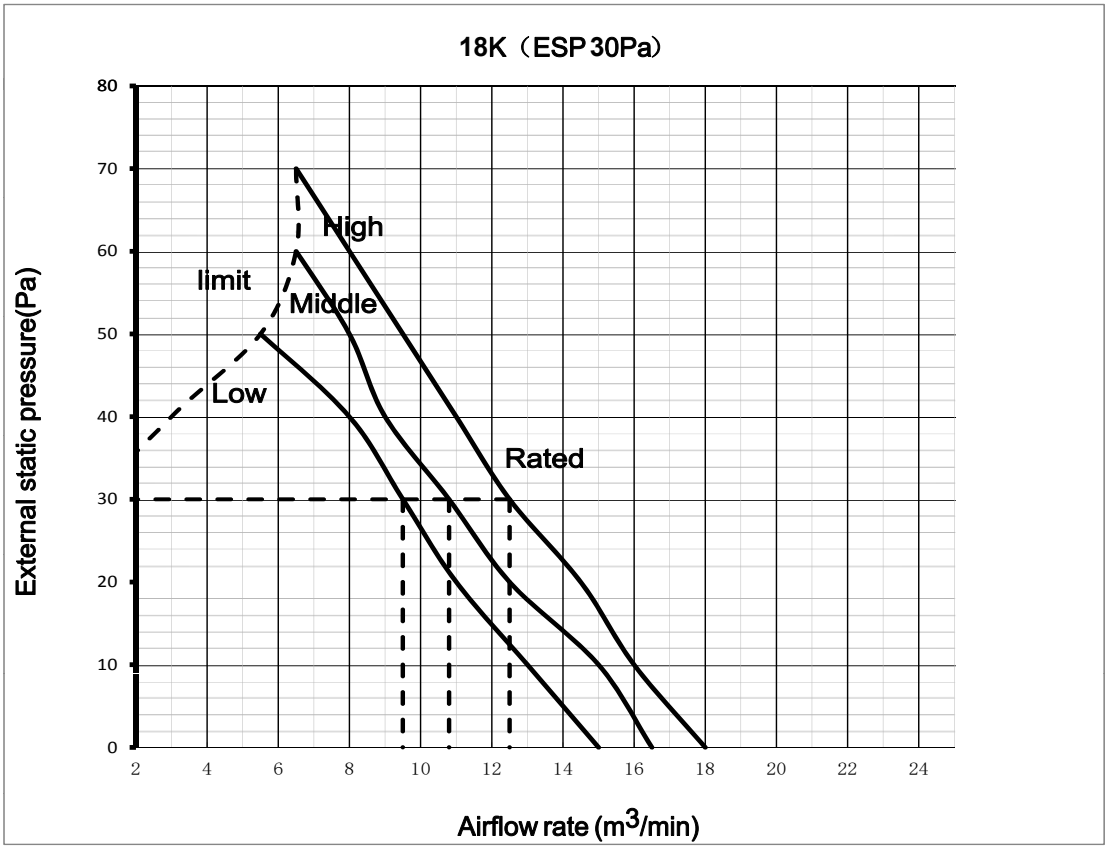

7. ESP (EXTERNAL STATIC PRESSURE) CHART (DUCT TYPE)

24K

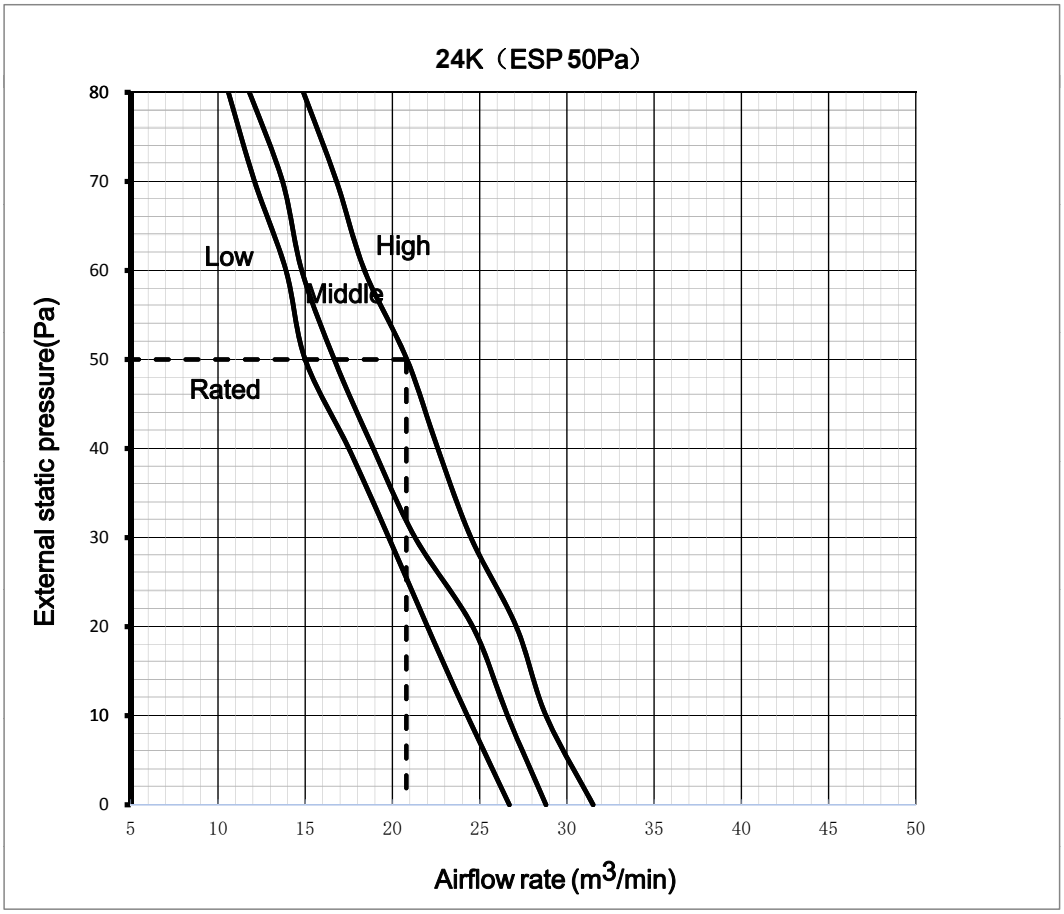

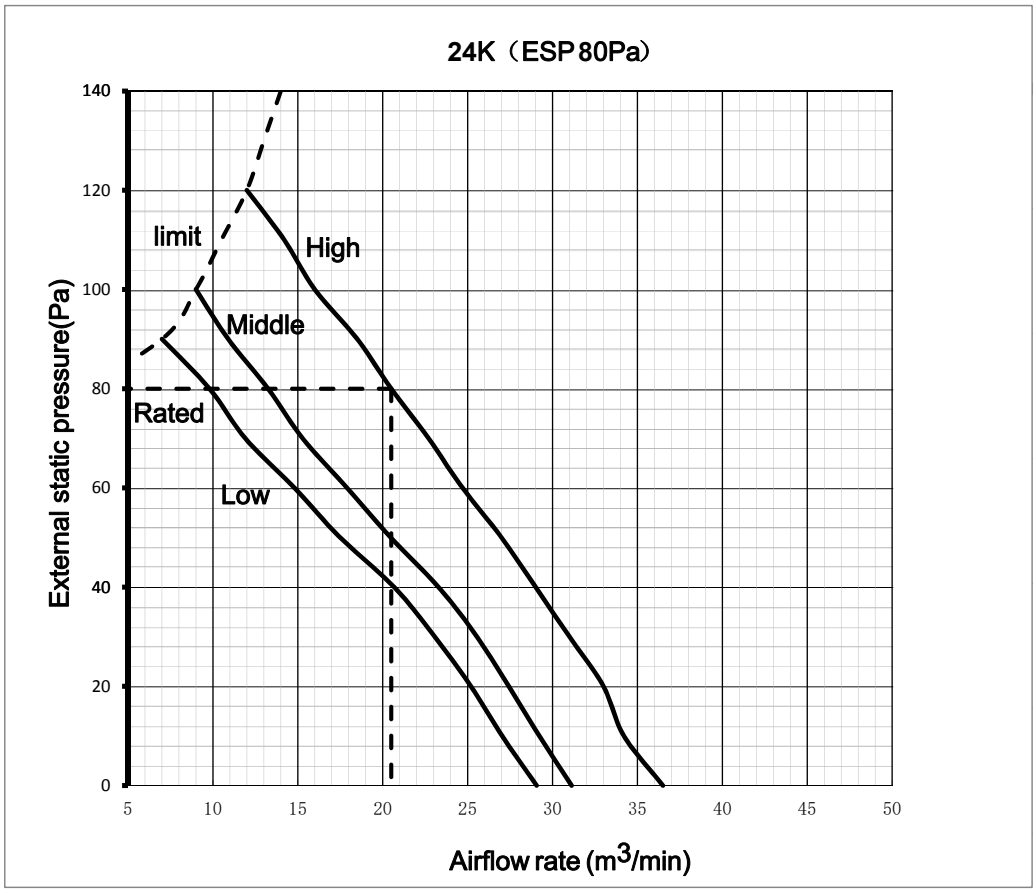

7. ESP (EXTERNAL STATIC PRESSURE) CHART (DUCT TYPE)

36K

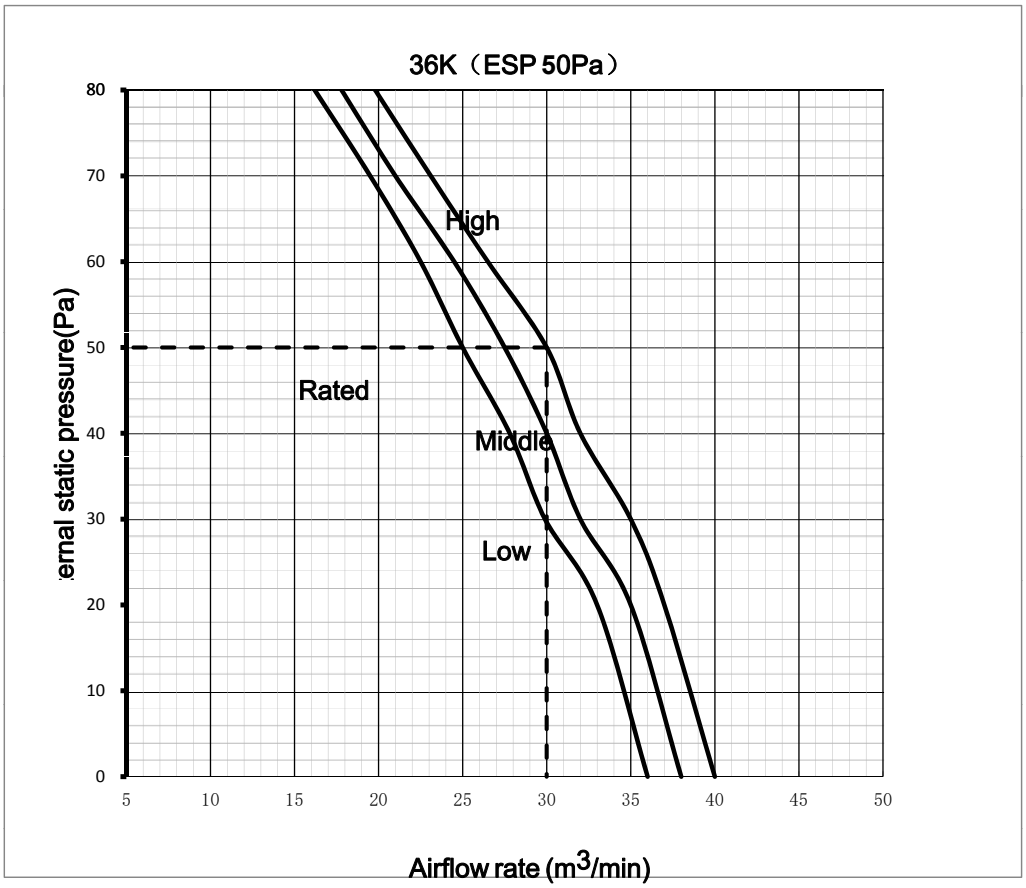

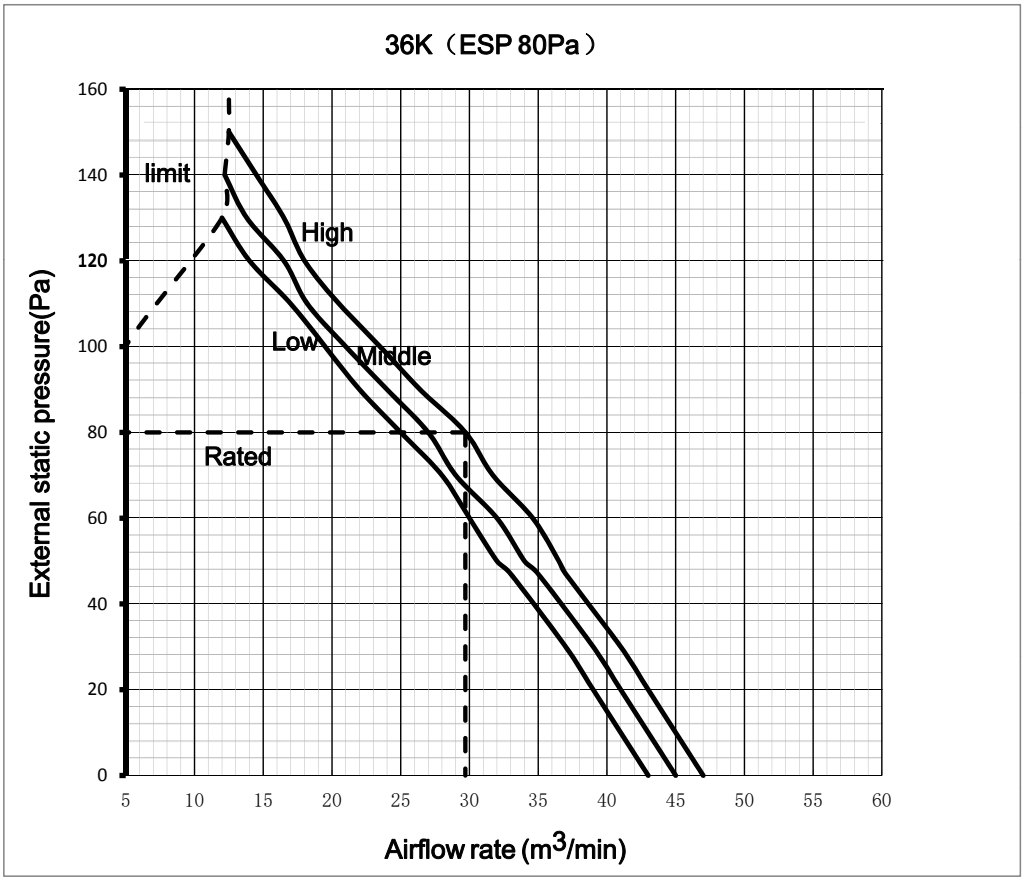

7. ESP (EXTERNAL STATIC PRESSURE) CHART (DUCT TYPE)

48K

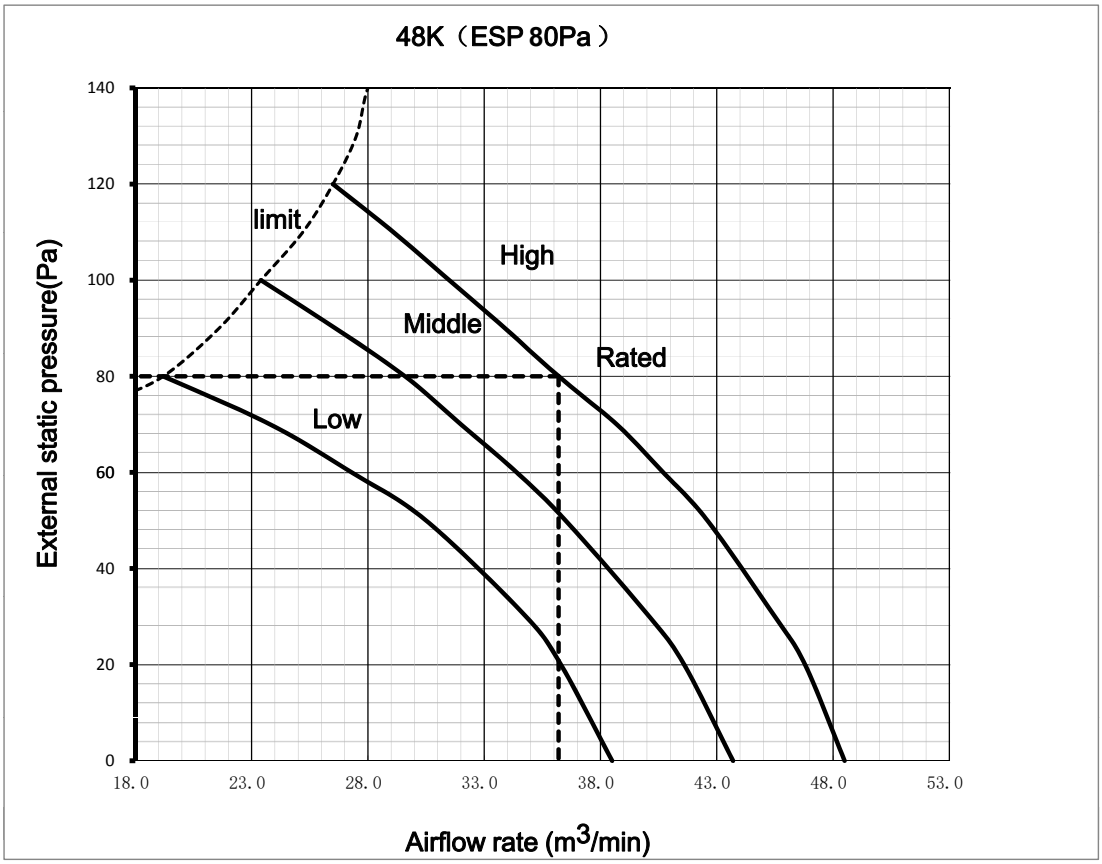

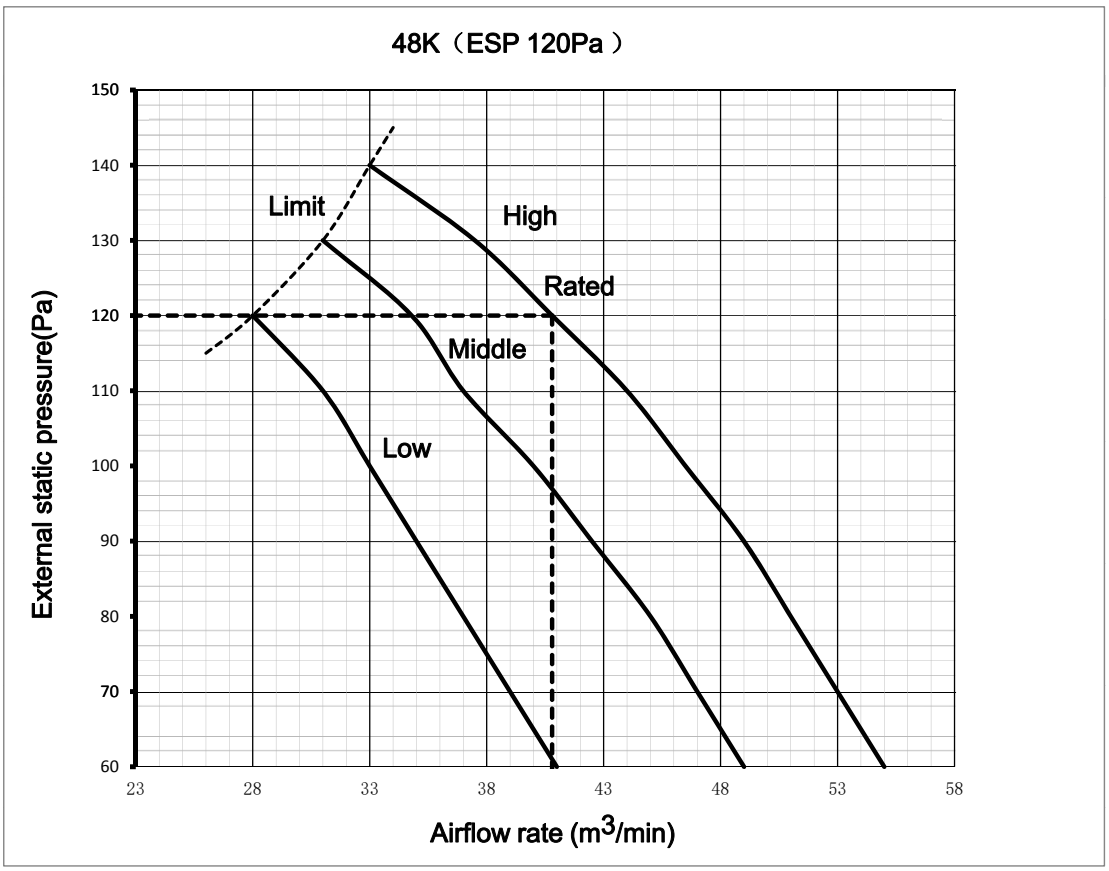

7. ESP (EXTERNAL STATIC PRESSURE) CHART (DUCT TYPE)

60K

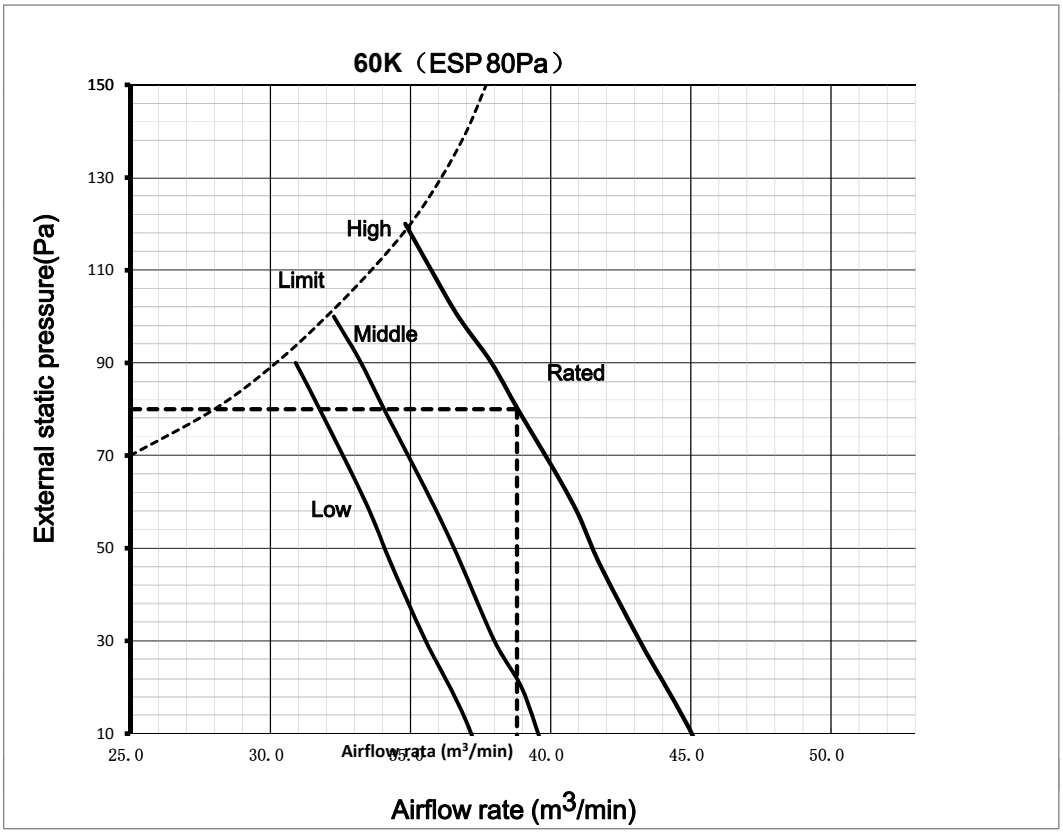

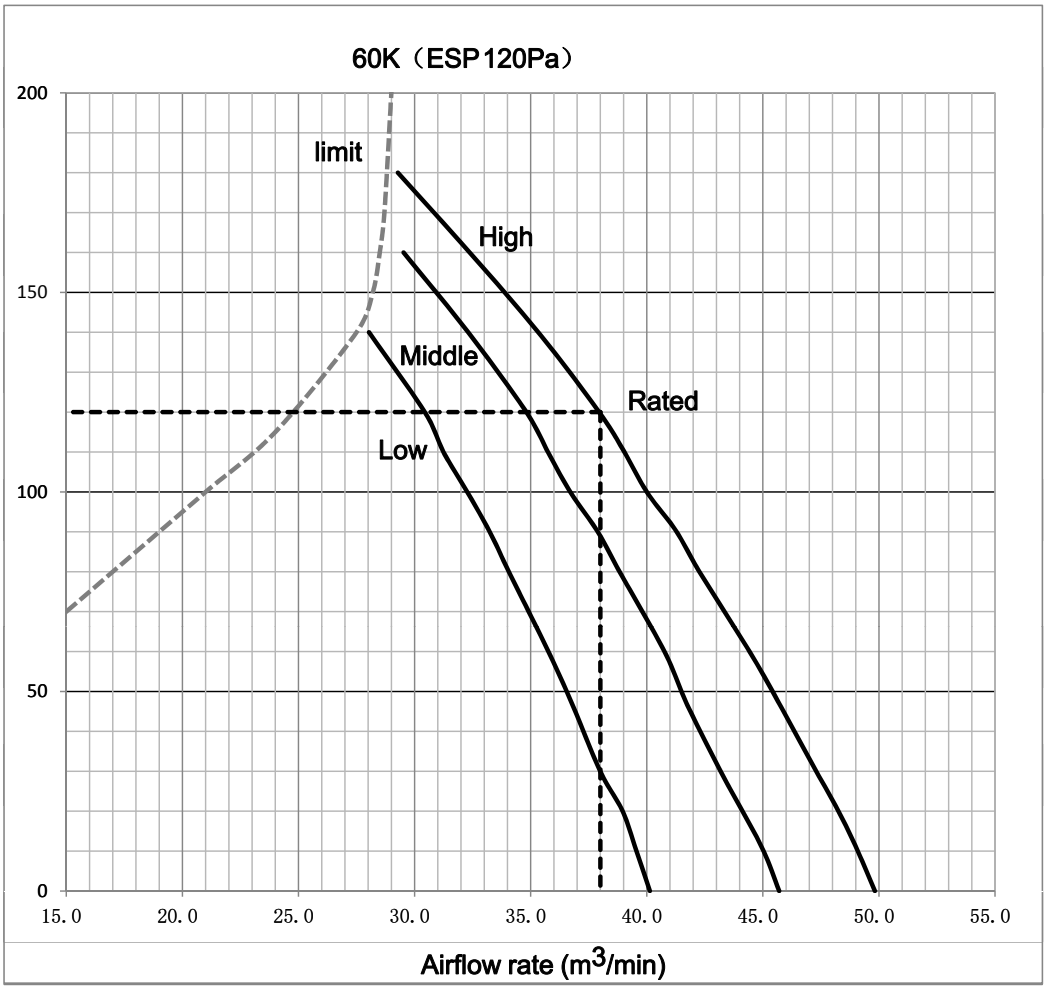

8. Refrigerant cycle

Indoor Unit

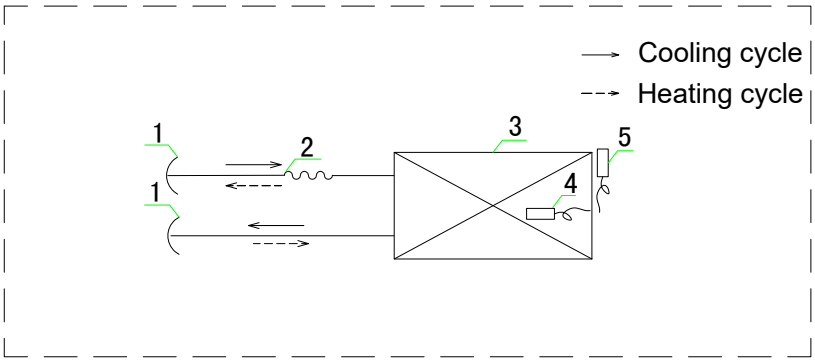

INDOOR UNIT

REFRIGERATION COMPONENTS NAME LIST					
4	Indoor coil temp. sensor				
3	Indoor heat exchanger				
2	Distributing capillary				
1	Single-ended union	5	Room ambient temp. sensor		
No.	NAME	No.	NAME	No.	NAME

8. REFRIGERANT CYCLE

Outdoor Unit
9K/12K

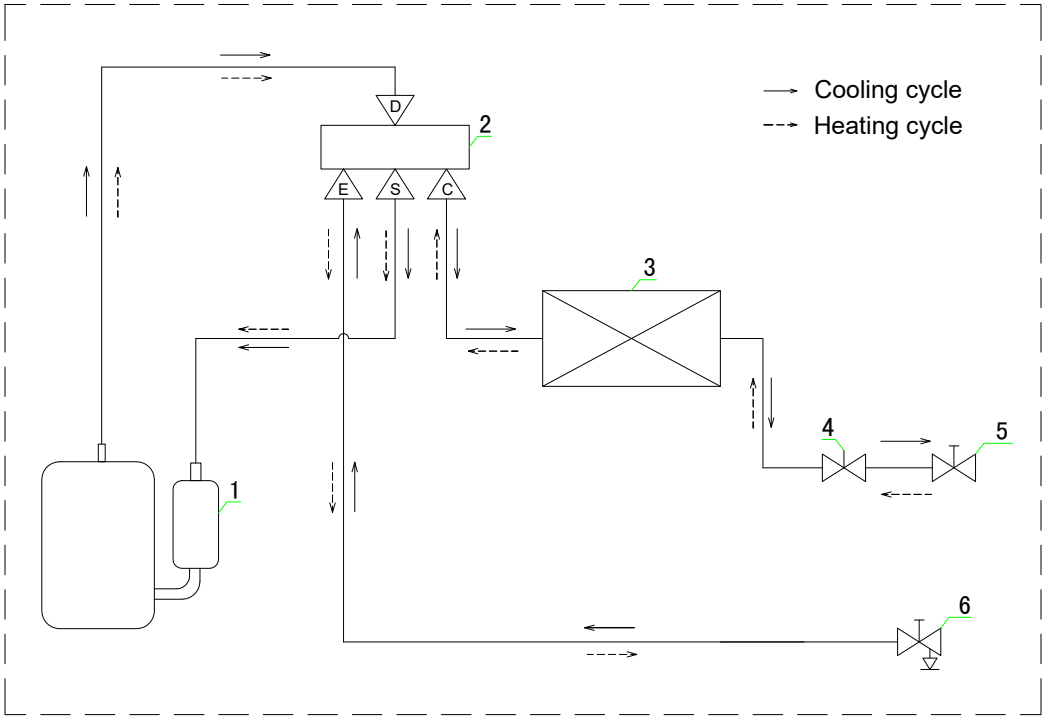

REFRIGERATION COMPONENTS NAME LIST					
4	Capillary				
3	Outdoor heat exchanger				
2	Reversing valve	6	Service valve(charge port)		
1	Compressor	5	Service valve		
No.	NAME	No.	NAME	No.	NAME

8. REFRIGERANT CYCLE

18K

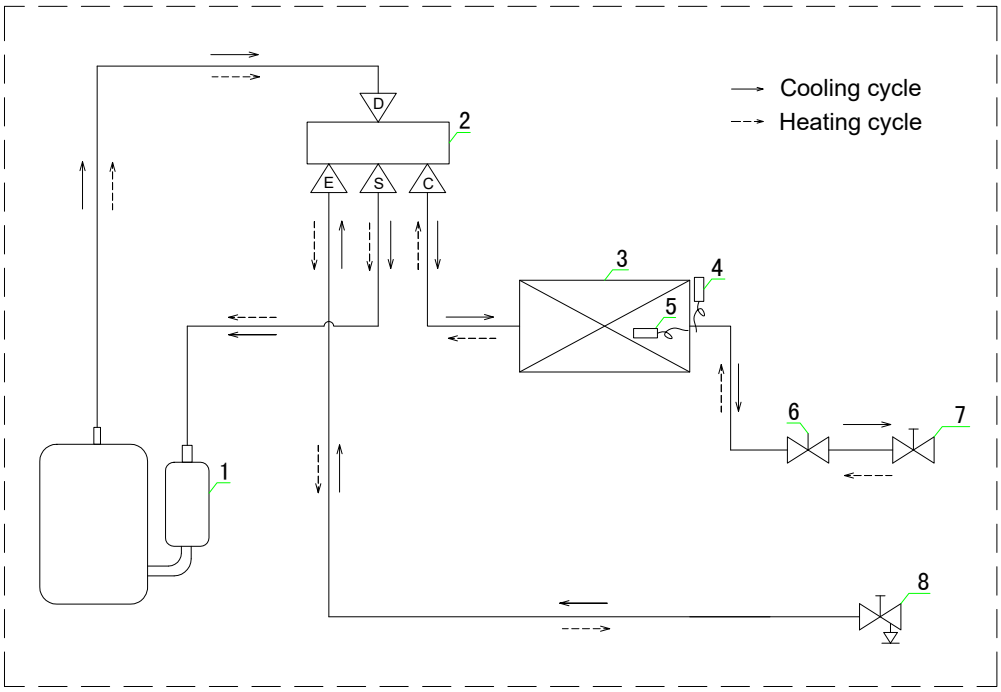

REFRIGERATION COMPONENTS NAME LIST					
4	Ambient temp. sensor	8	Service valve(charge port)		
3	Outdoor heat exchanger	7	Service valve		
2	Reversing valve	6	Capillary		
1	Compressor	5	Outdoor coil temp. sensor		
No.	NAME	No.	NAME	No.	NAME

8. REFRIGERANT CYCLE

24K

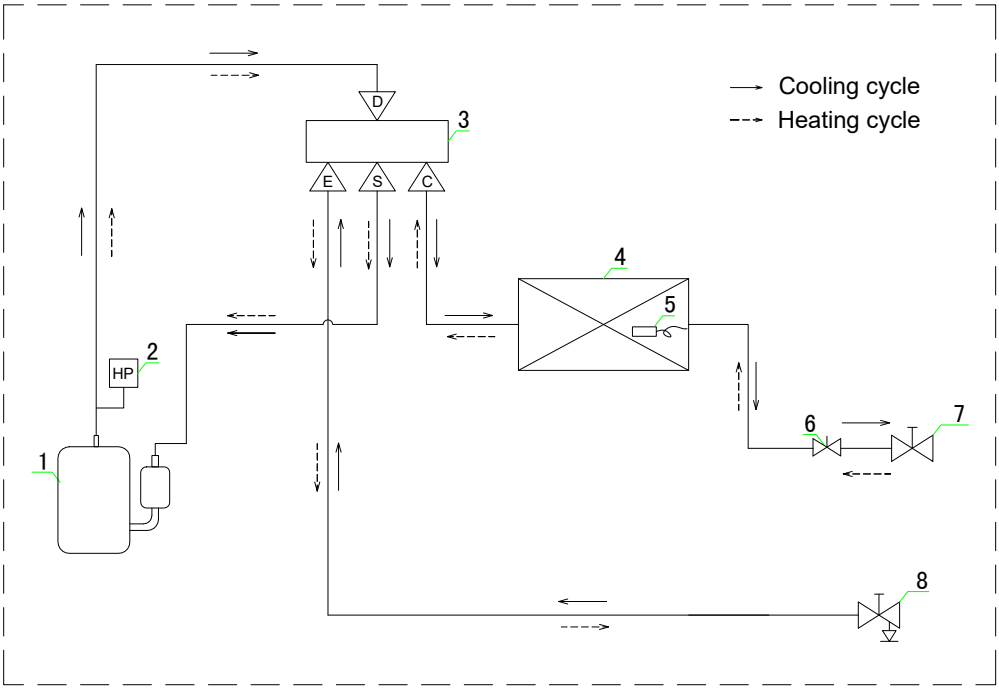

OUTDOOR UNIT

REFRIGERATION COMPONENTS NAME LIST					
4	Outdoor heat exchanger	8	Service valve(charge port)		
3	Reversing valve	7	Service valve		
2	High pressure switch	6	throttle vale		
1	Compressor	5	Outdoor coil temp. sensor		
No.	NAME	No.	NAME	No.	NAME

8. REFRIGERANT CYCLE

36K

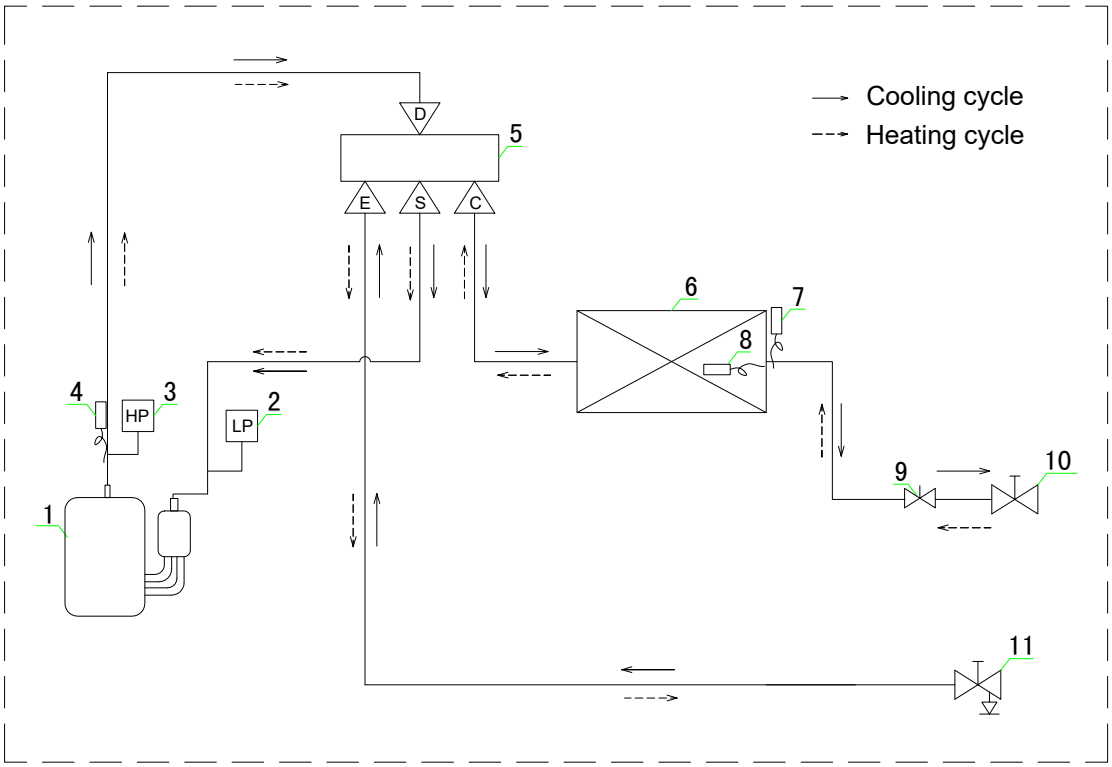

OUTDOOR UNIT

REFRIGERATION COMPONENTS NAME LIST					
4	Discharge temp. sensor	8	Outdoor coil temp. sensor		
3	High pressure switch	7	Ambient temp. sensor	11	Service valve(charge port)
2	Low pressure switch	6	Outdoor heat exchanger	10	Service valve
1	Compressor	5	Reversing valve	9	throttle vale
No.	NAME	No.	NAME	No.	NAME

8. REFRIGERANT CYCLE

48K/60K

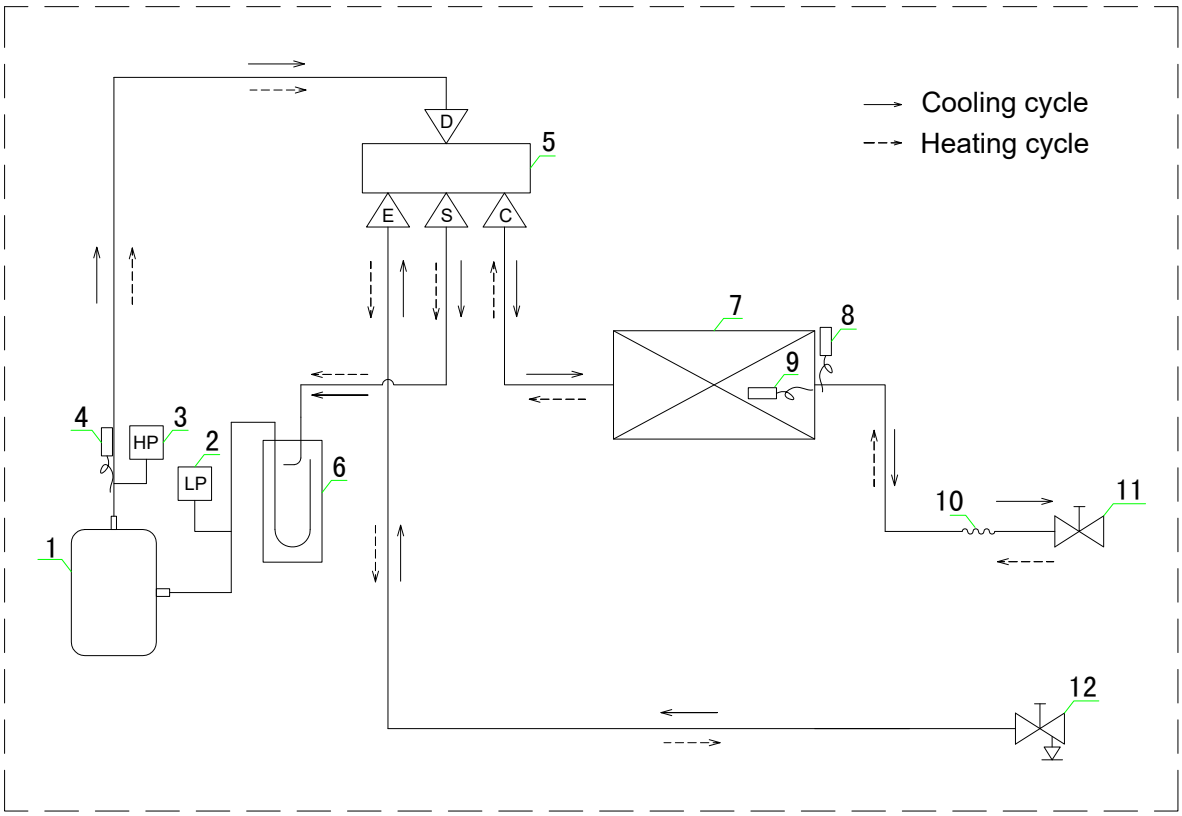

OUTDOOR UNIT

REFRIGERATION COMPONENTS NAME LIST					
4	Discharge temp. sensor	8	Ambient temp. sensor	12	Service valve(charge port)
3	High pressure switch	7	Outdoor heat exchanger	11	Service valve
2	Low pressure switch	6	Accumulator	10	Capillary
1	Compressor	5	Reversing valve	9	Outdoor coil temp. sensor
No.	NAME	No.	NAME	No.	NAME

9. Fresh air intake function

Cassette (24K~60K)

It is possible to inhale fresh air to indoor unit from the reserved fresh air intake, the size of the fresh air intake is Φ125mm.

Please follow the steps below when need:

1）Cut off the reserved metal circular hole on the side board；

2）There is reserved fresh air tunnel between the foam and the water drain part；

3）Connect air duct with the fresh air intake.

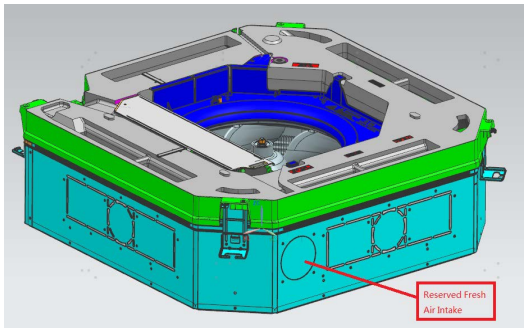

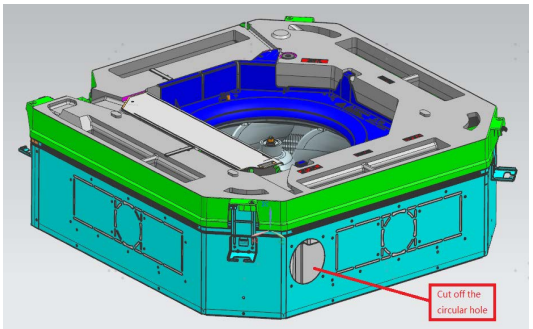

Ceiling & Floor

All of the floor ceiling indoor units are provided with fresh air function.It is possible to inhale fresh air to indoor unit from the reserved fresh air intake, the size of the fresh air intake is Φ50（mm）.Please follow the steps below when need.

1) Cut off the reserved metal rectangular hole on the base board or rear board according to installation location.

2) Connect air duct with the fresh air intake.

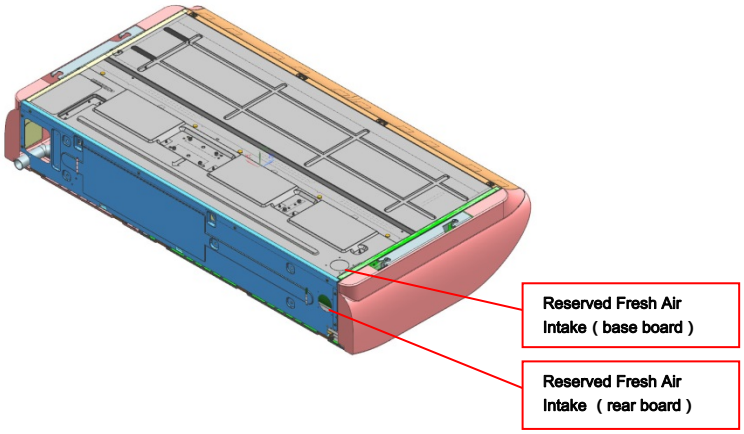

10. Wiring diagram

10.1 Electrical wiring diagrams

Indoor Unit

Duct(9K/12K)

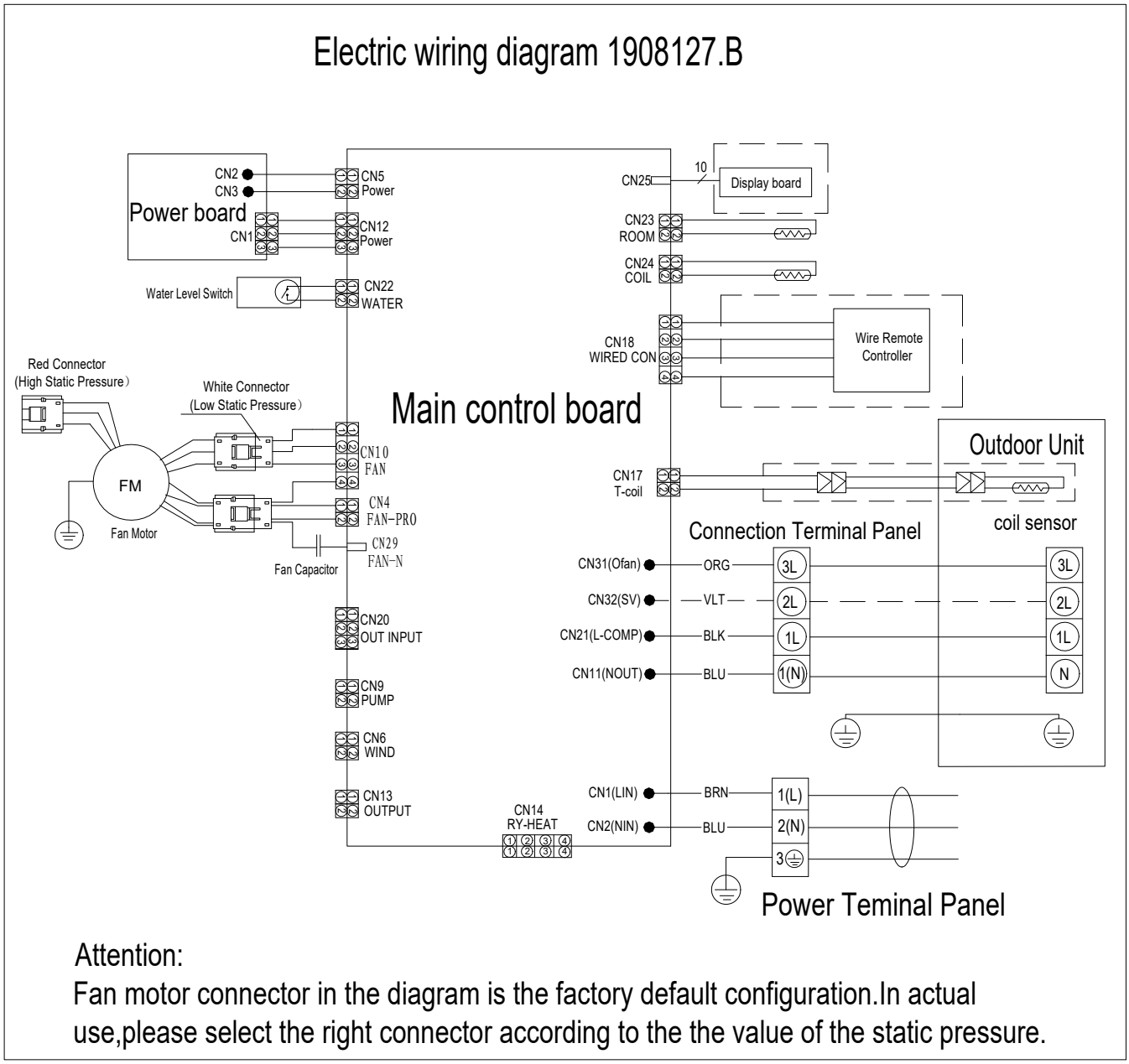

Remark:

Dashed parts are not available in some models.

Details see the table below.

Pump motor &Earth wire	Step motor	WIFI	Wire remote controller	Display board	T-Coil	SWING MOTOR
			●			

●--available part

10. WIRING DIAGRAM

Duct(18K)

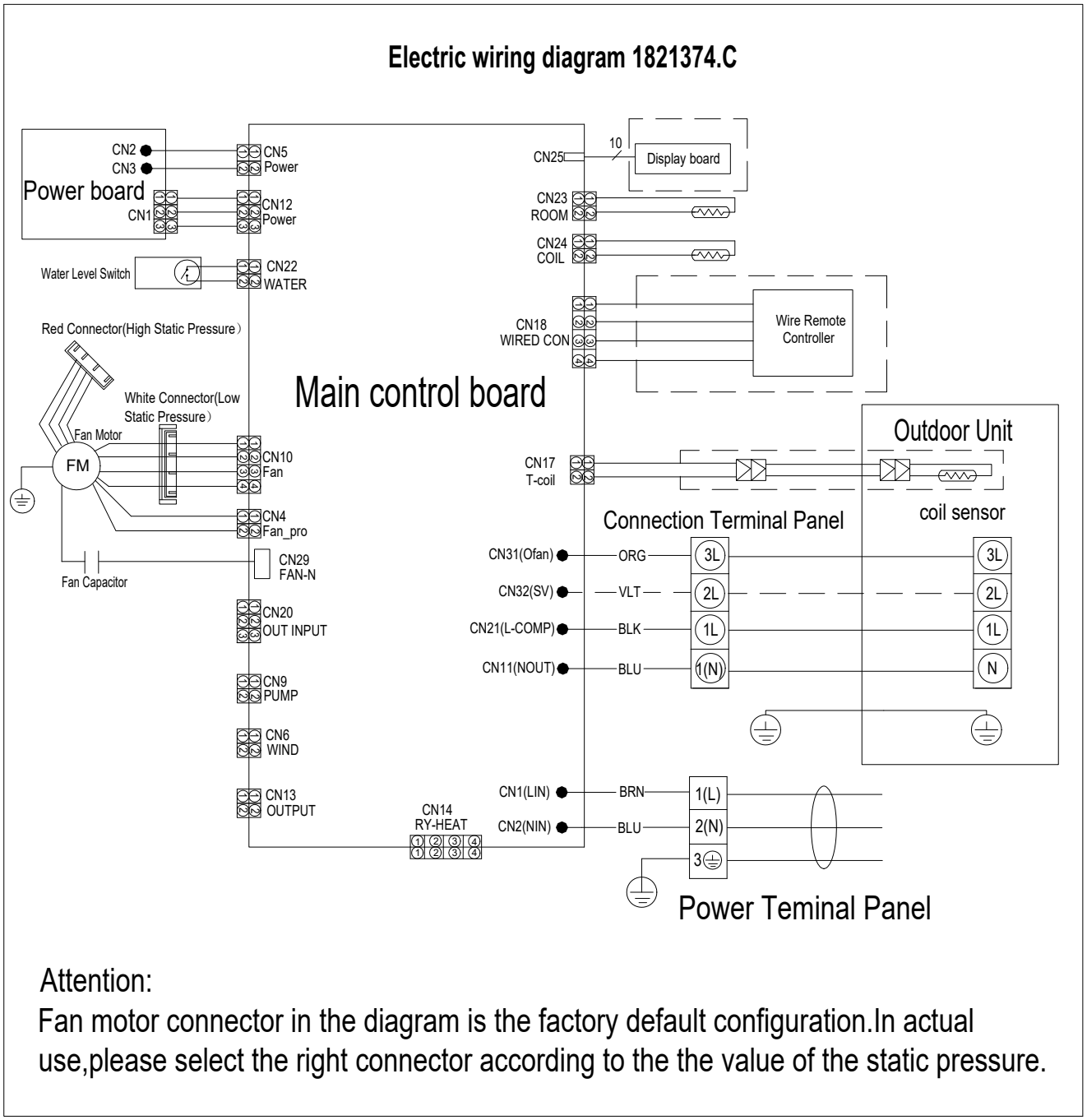

Attention:

Fan motor connector in the diagram is the factory default configuration.In actual use,please select the right connector according to the the value of the static pressure.

Remark:

Dashed parts are not available in some models.

Details see the table below.

Pump motor &Earth wire	Step motor	WIFI	Wire remote controller	Display board	T-Coil	SWING MOTOR
			●		●	

●--available part

10. WIRING DIAGRAM

Duct(24K/36K/48K/60K)

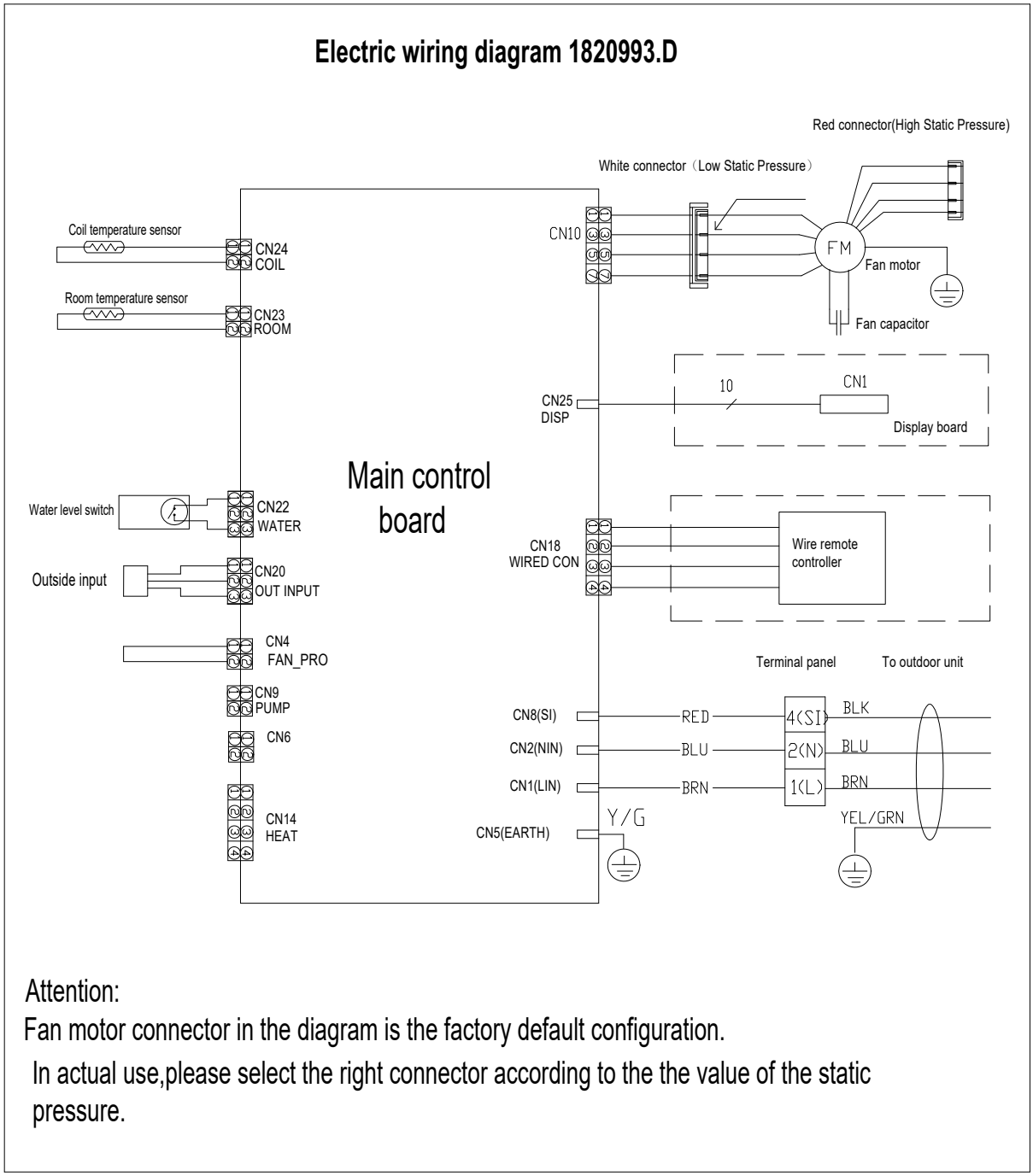

Attention:

Fan motor connector in the diagram is the factory default configuration.

In actual use,please select the right connector according to the the value of the static pressure.

Remark:

Dashed parts are not available in some models.

Details see the table below.

Pump motor &Earth wire	Step motor	WIFI	Wire remote controller	Display board	T-Coil	SWING MOTOR
			●			

●--available part

10. WIRING DIAGRAM

Cassette (9K/12K/18K)

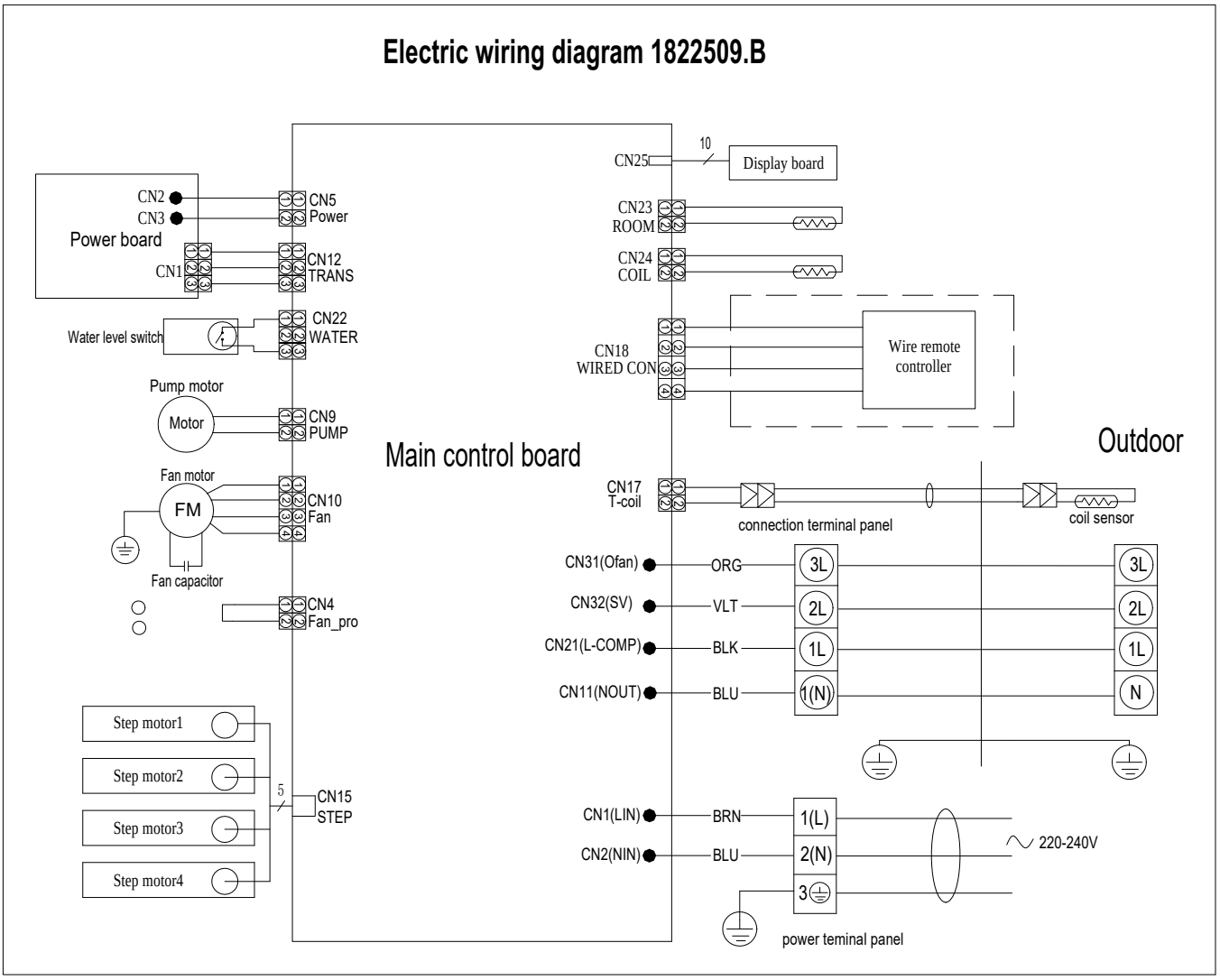

Remark:
Dashed parts are not available in some models.
Details see the table below.

Model	Pump motor&Earth wire	Step motor	WIFI	Wire remote controller	Display board	T-Coil	SWING MOTOR
9K/12K	●	●			●		
18K	●	●			●	●	

●--available part

10. WIRING DIAGRAM

Cassette (24K/36K/48K/60K)

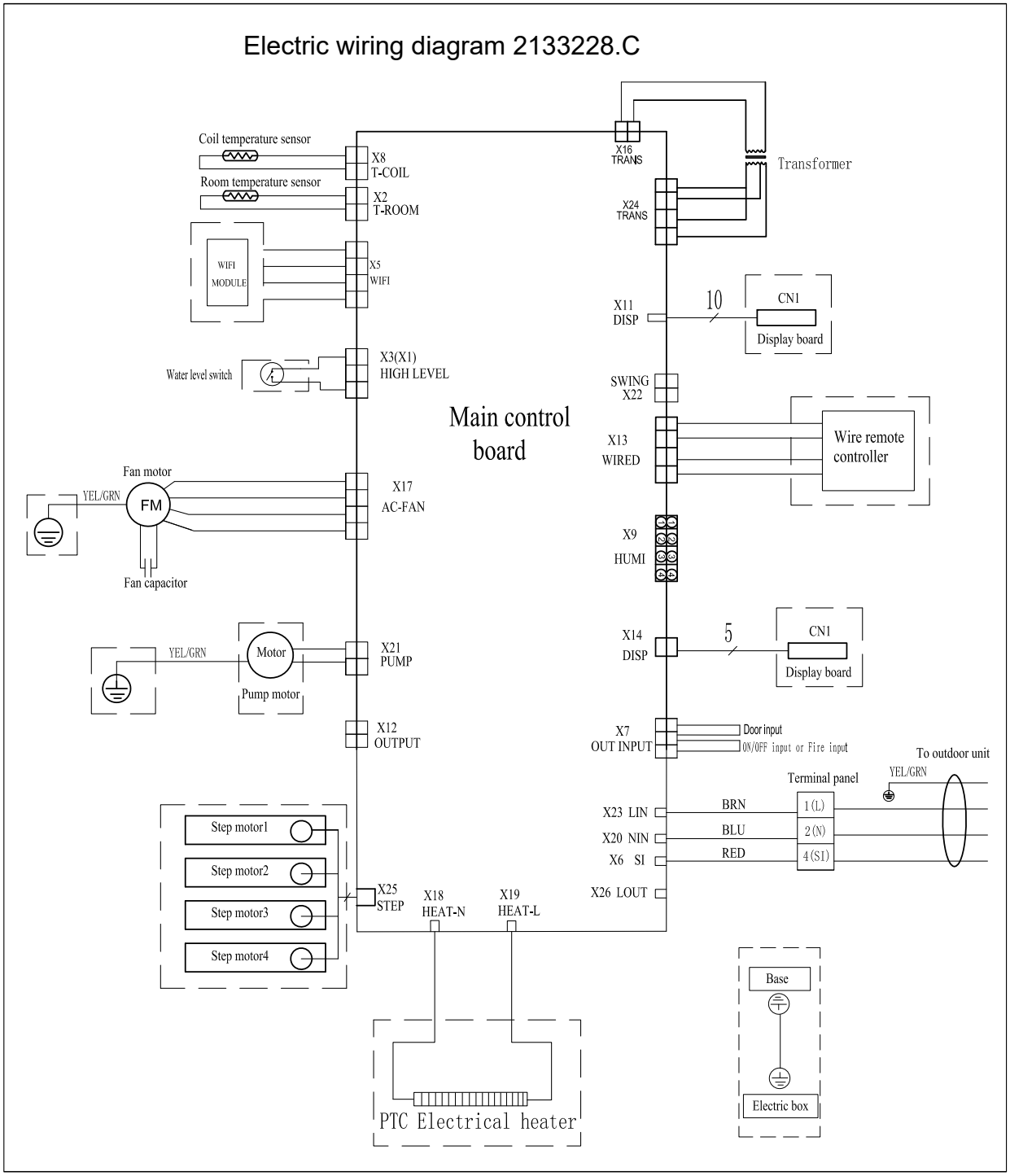

Remark:
Dashed parts are not available in some models.
Details see the table below.

Series	Indoor units model	WIFI Module	Water level switch	Fan motor earth	Pump motor	Pump motor earth	Step motor	PTC Electrical heater	Display board	Wire remote controller	Base to Electric box
Cassette	24K/36K/ 48K/60K		●	●	●	●	●		●		●

●--available part

10. WIRING DIAGRAM

Ceiling & Floor(18K/24K/36K)

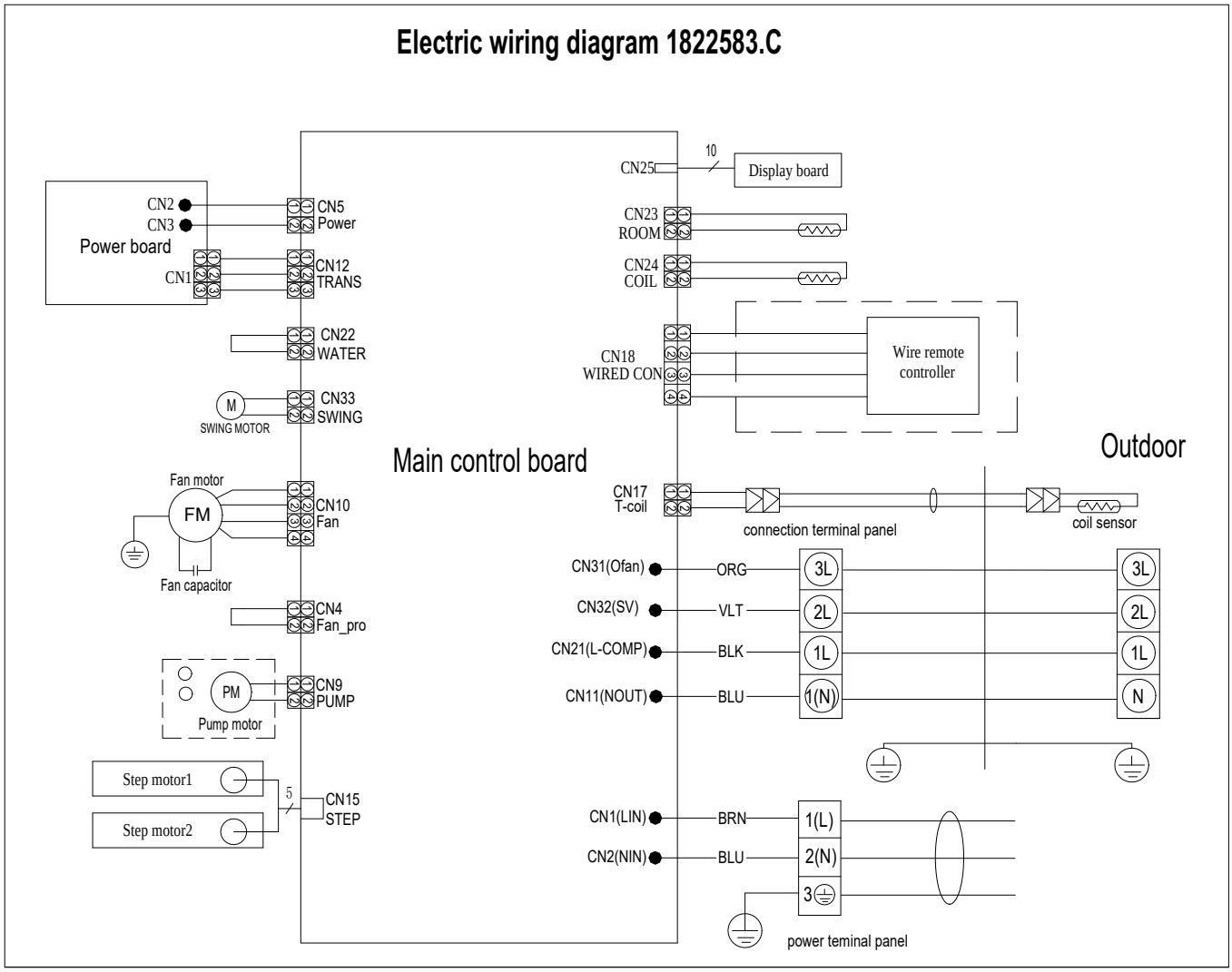

Remark:
Dashed parts are not available in some models.
Details see the table below.

Pump motor&Earth wire	Step motor	WIFI	Wire remote controller	Display board	T-Coil	SWING MOTOR
	●			●	●	●

●--available part

10. WIRING DIAGRAM

Ceiling & Floor(18K)

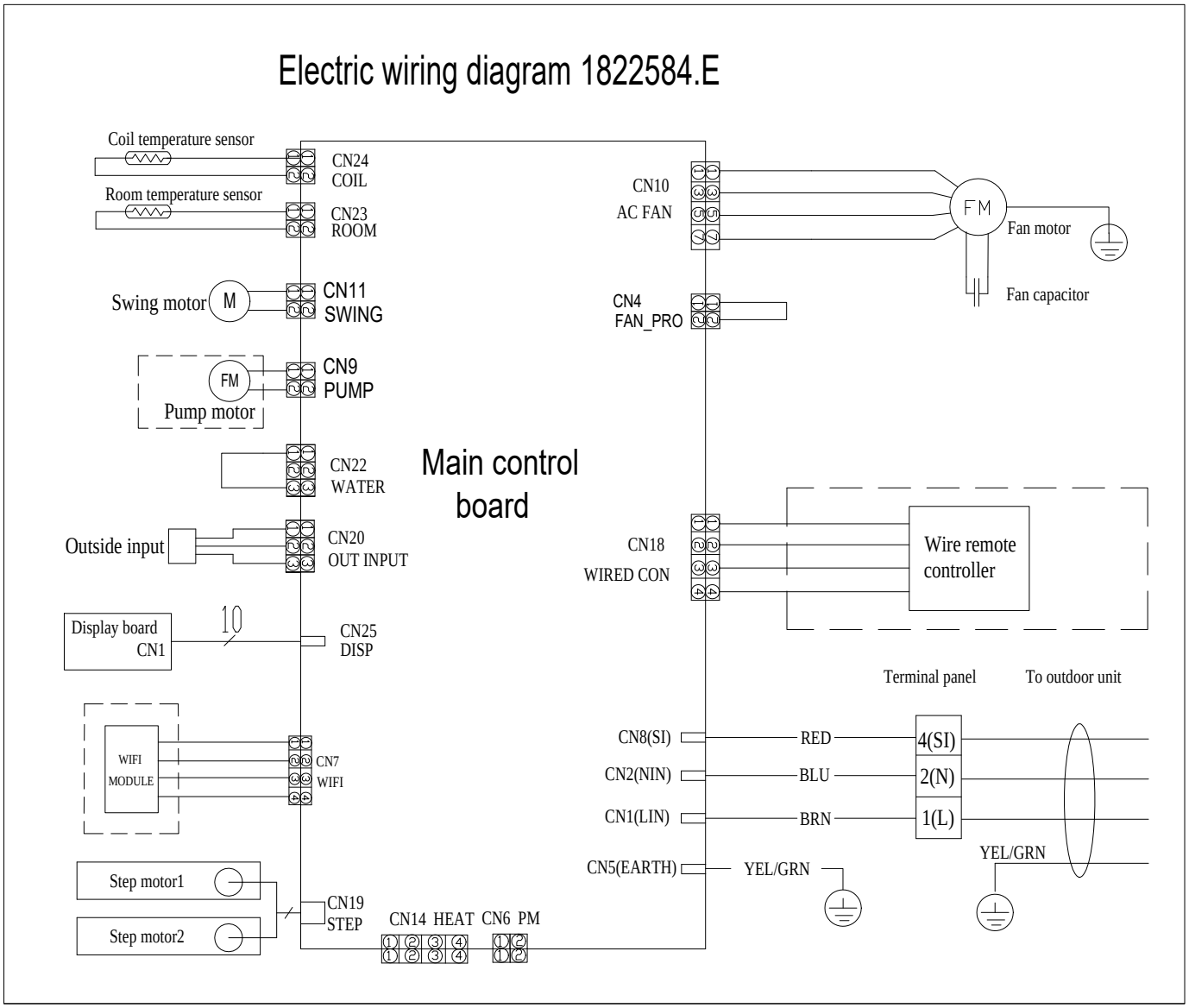

Remark:
Dashed parts are not available in some models.
Details see the table below.

Pump motor&Earth wire	Step motor	WIFI	Wire remote controller	Display board	T-Coil	SWING MOTOR
18K	●			●		●

●--available part

10. WIRING DIAGRAM

Outdoor Unit

9K/12K

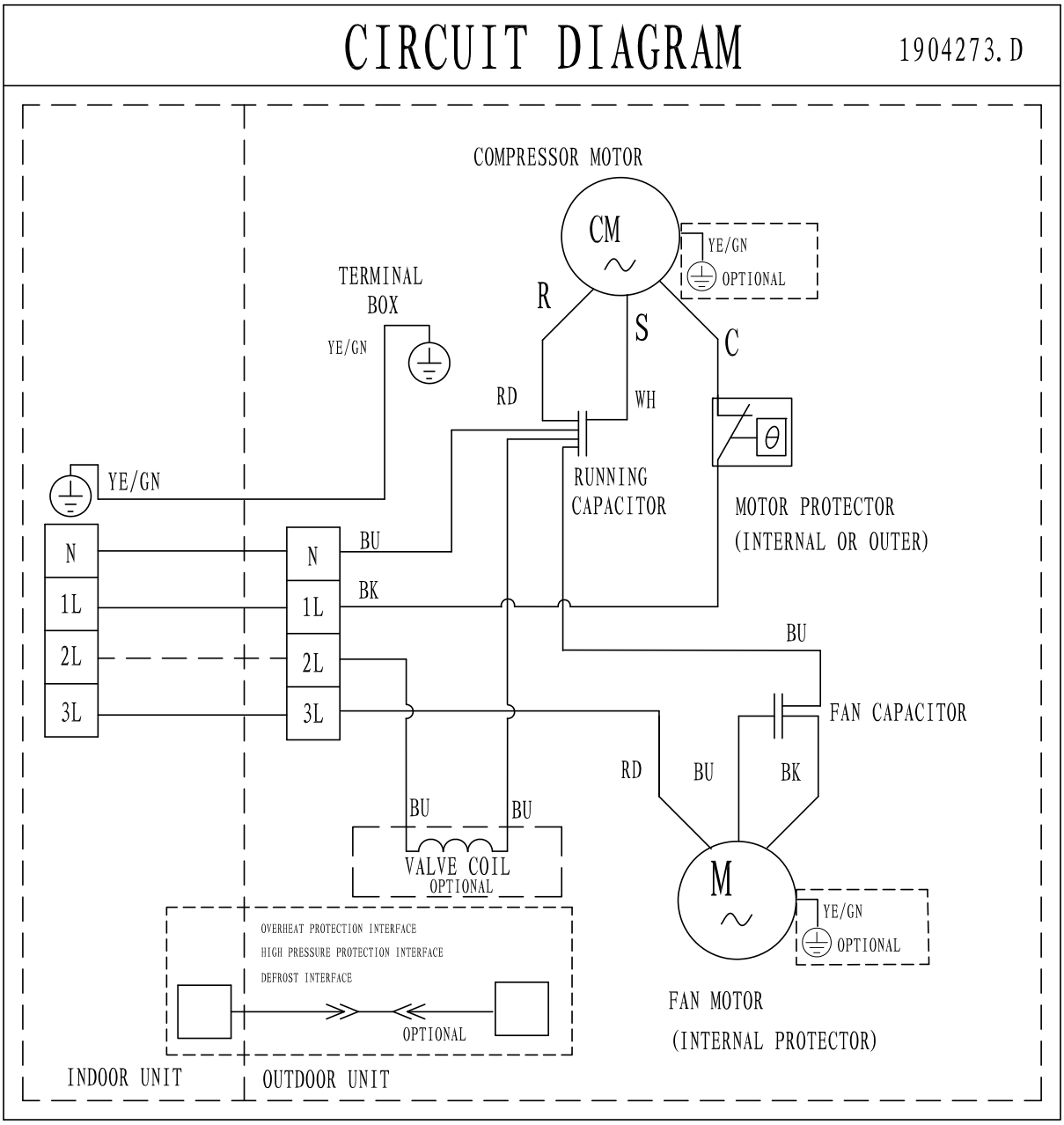

Remark:
Dashed parts are not available in some models.
Details see the table below.

Kmbcj	Earth wire for Heat exchanger terminal panel	Earth wire for Motor Supporter	4-Valve/4-way valve &mj'	Earth wire for Compressor	Compressor Crankcase Heater	Earth wire for AC FAN OR DC FAN	HIGH PRESSURE SWITCH	LOW PRESSURE SWITCH	T-Coil
9K/12K			●	●		●			

●--available part

10. WIRING DIAGRAM

18K

Electric wiring diagram 1928155.D

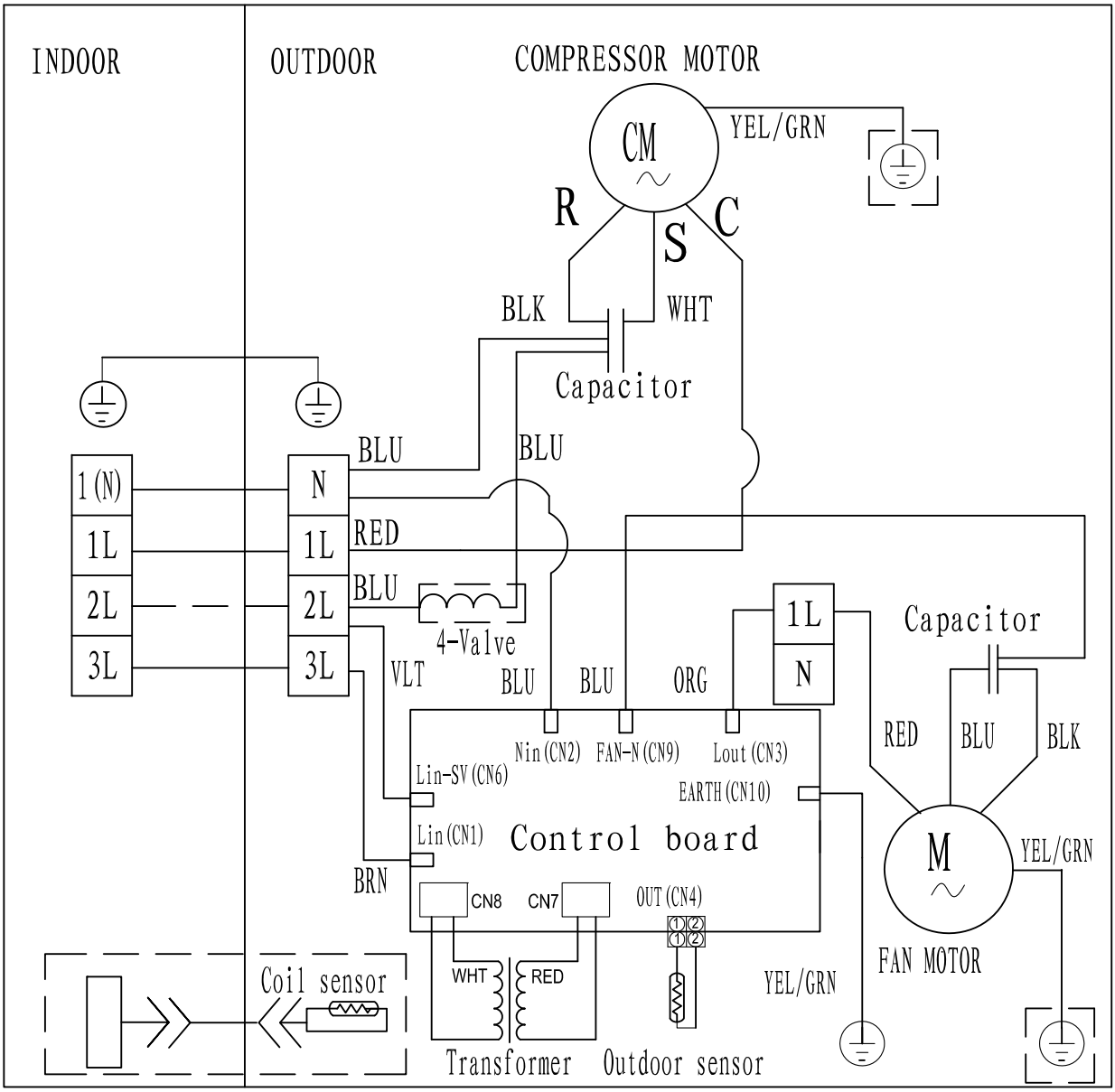

Remark:
Dashed parts are not available in some models.
Details see the table below.

Kmbcj	Earth wire for Heat exchanger terminal panel	Earth wire for Motor Supporter	4-Valve/4-way valve &mj'	Earth wire for Compressor	Compressor Crankcase Heater	Earth wire for AC FAN OR DC FAN	HIGH PRESSURE SWITCH	LOW PRESSURE SWITCH	T-Coil
18K			●	●		●			

●--available part

10. WIRING DIAGRAM

24K

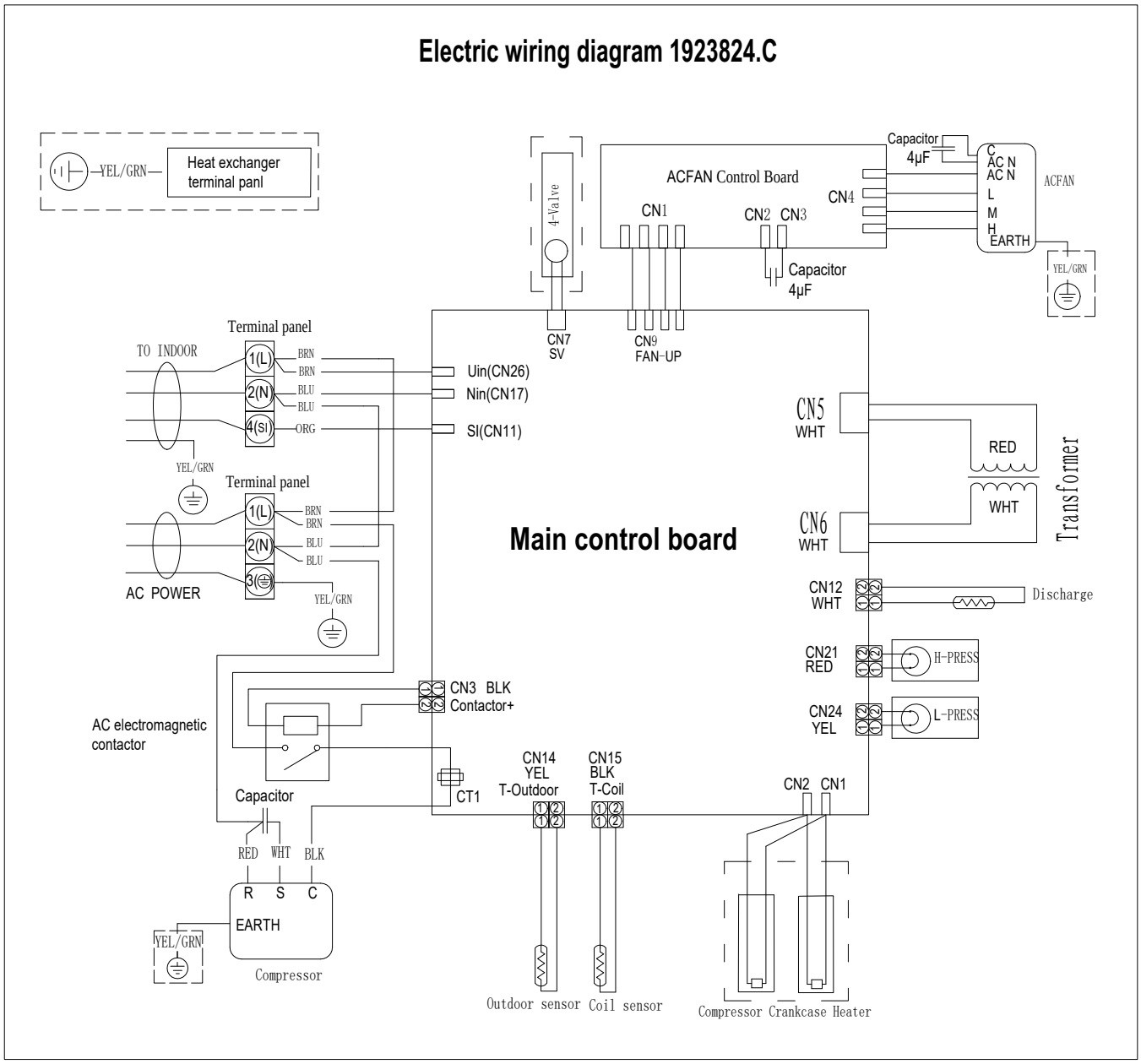

Remark:
Dashed parts are not available in some models.
Details see the table below.

Kmbcj	Earth wire for Heat exchanger terminal panel	Earth wire for Motor Supporter	4-Valve/4-way valve &amj'	Earth wire for Compressor	Compressor Crankcase Heater	Earth wire for AC FAN OR DC FAN	HIGH PRESSURE SWITCH	LOW PRESSURE SWITCH	T-Coil
24K		●	●	●	●		●	●	●

●--available part

10. WIRING DIAGRAM

36K(Single-Phase)

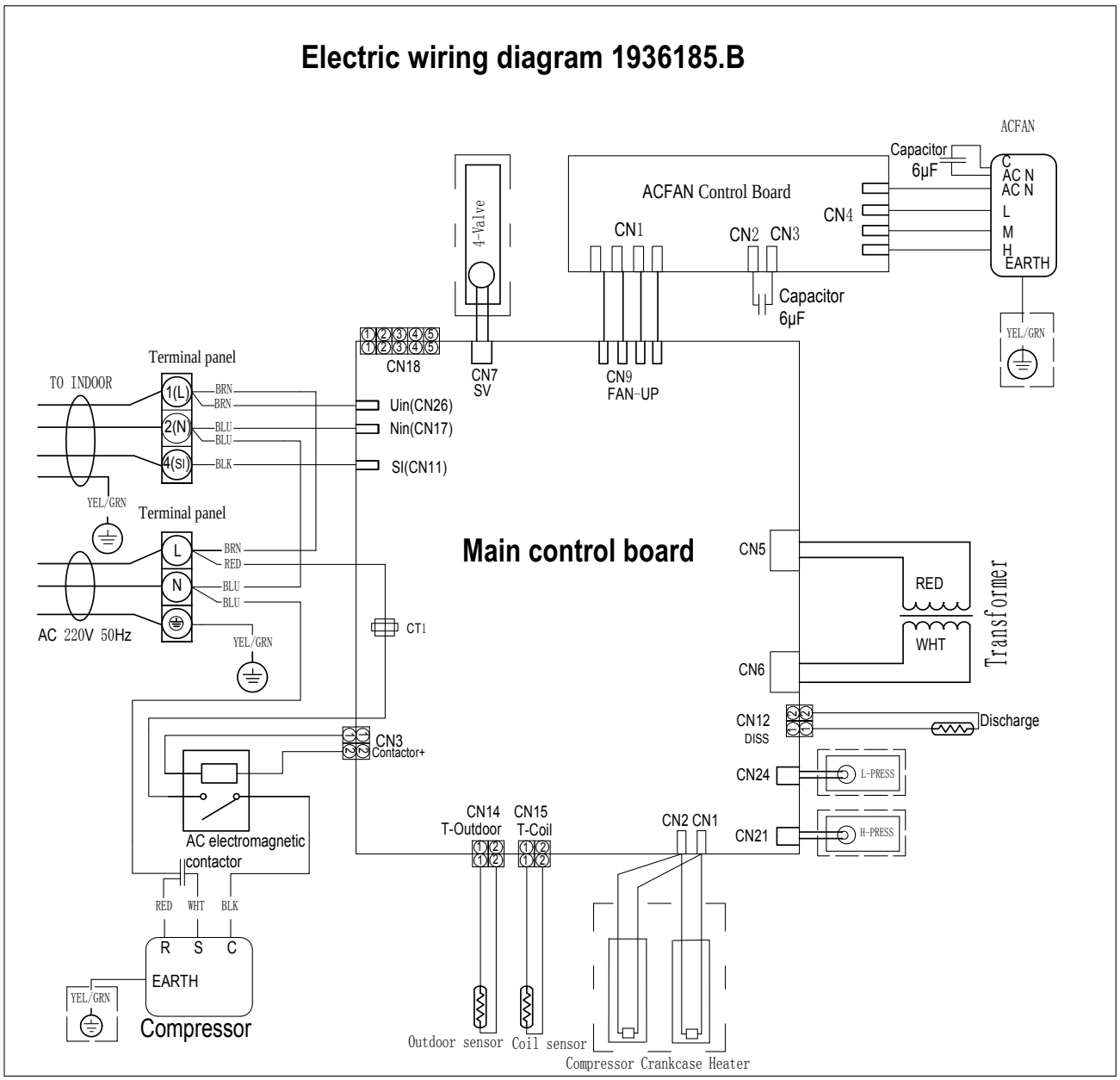

10. WIRING DIAGRAM

36K(3-Phase)

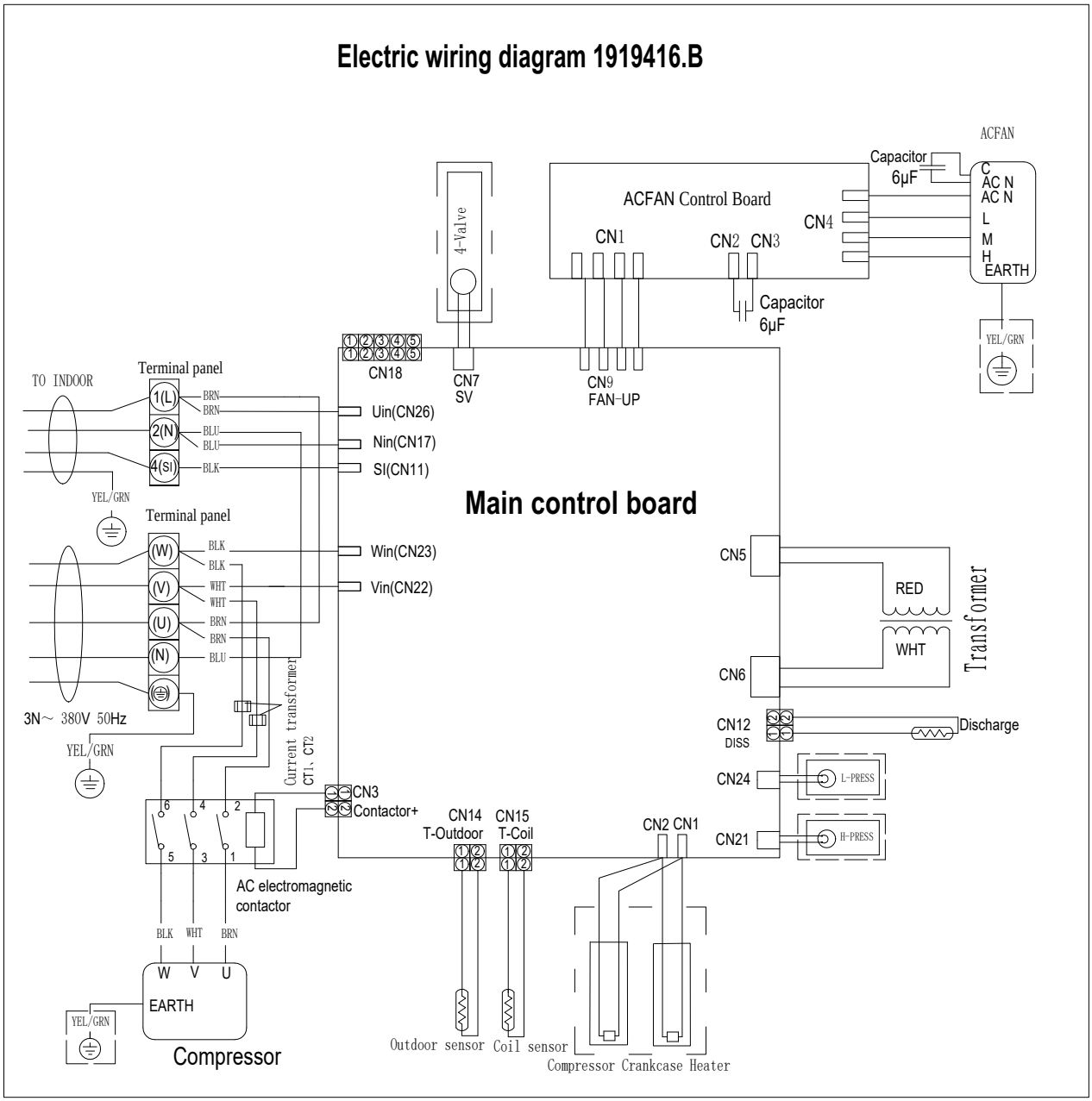

Remark:
Dashed parts are not available in some models.
Details see the table below.

Knbcj	Earth wire for Heat exchanger terminal panel	Earth wire for Motor Supporter	4-Valve/4-way valve &amj'	Earth wire for Compressor	Compressor Crankcase Heater	Earth wire for AC FAN OR DC FAN	HIGH PRESSURE SWITCH	LOW PRESSURE SWITCH	T-Coil
36K			●	●	●		●	●	●

●--available part

10. WIRING DIAGRAM

48K

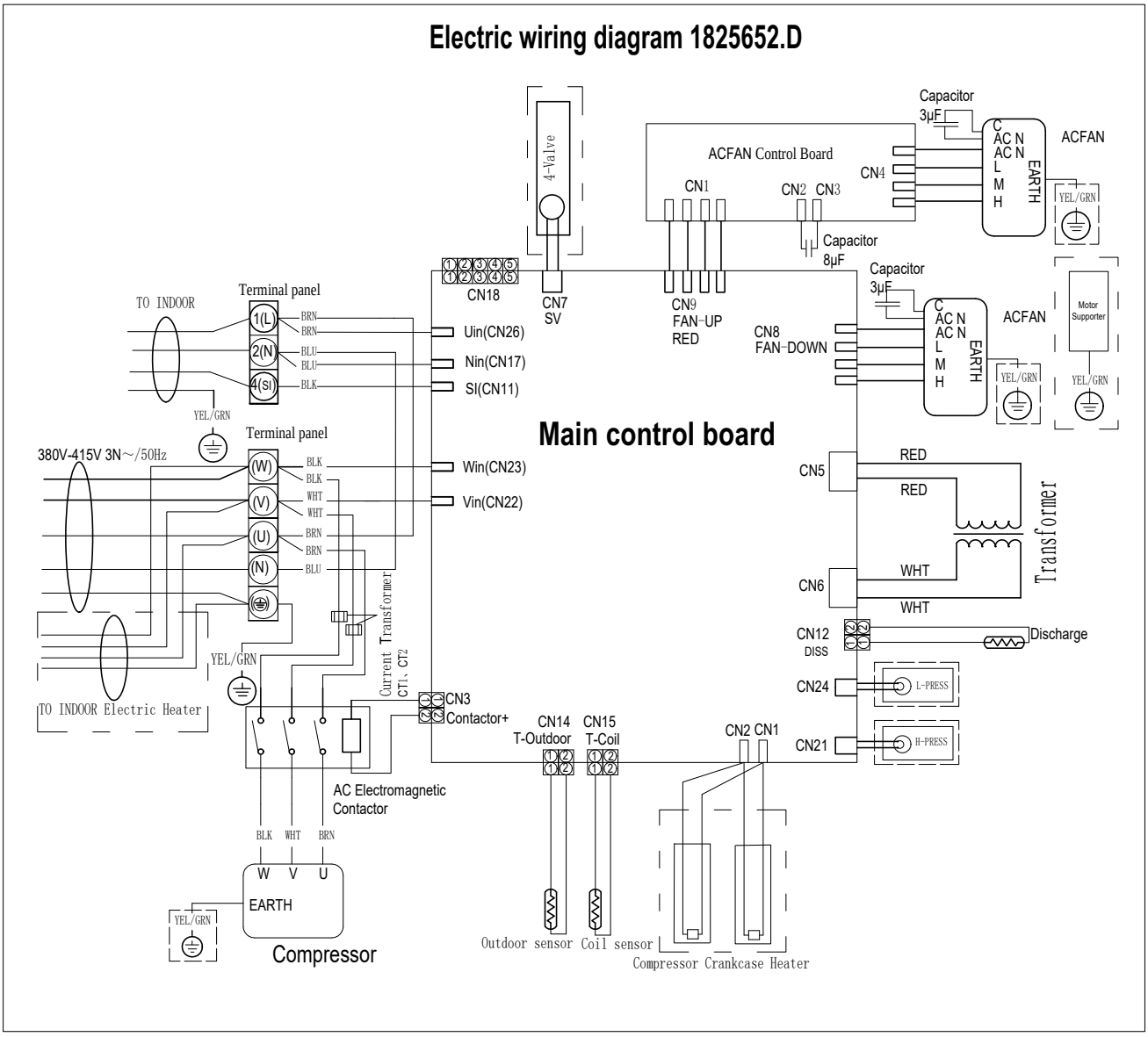

Remark:
Dashed parts are not available in some models.
Details see the table below.

Kmbcj	Earth wire for Heat exchanger terminal panel	Earth wire for Motor Supporter	4-Valve/4-way valve &mg'	Earth wire for Compressor	Compressor Crankcase Heater	Earth wire for AC FAN OR DC FAN	HIGH PRESSURE SWITCH	LOW PRESSURE SWITCH	T-Coil
48K			●	●	●		●	●	●

●--available part

10. WIRING DIAGRAM

60K

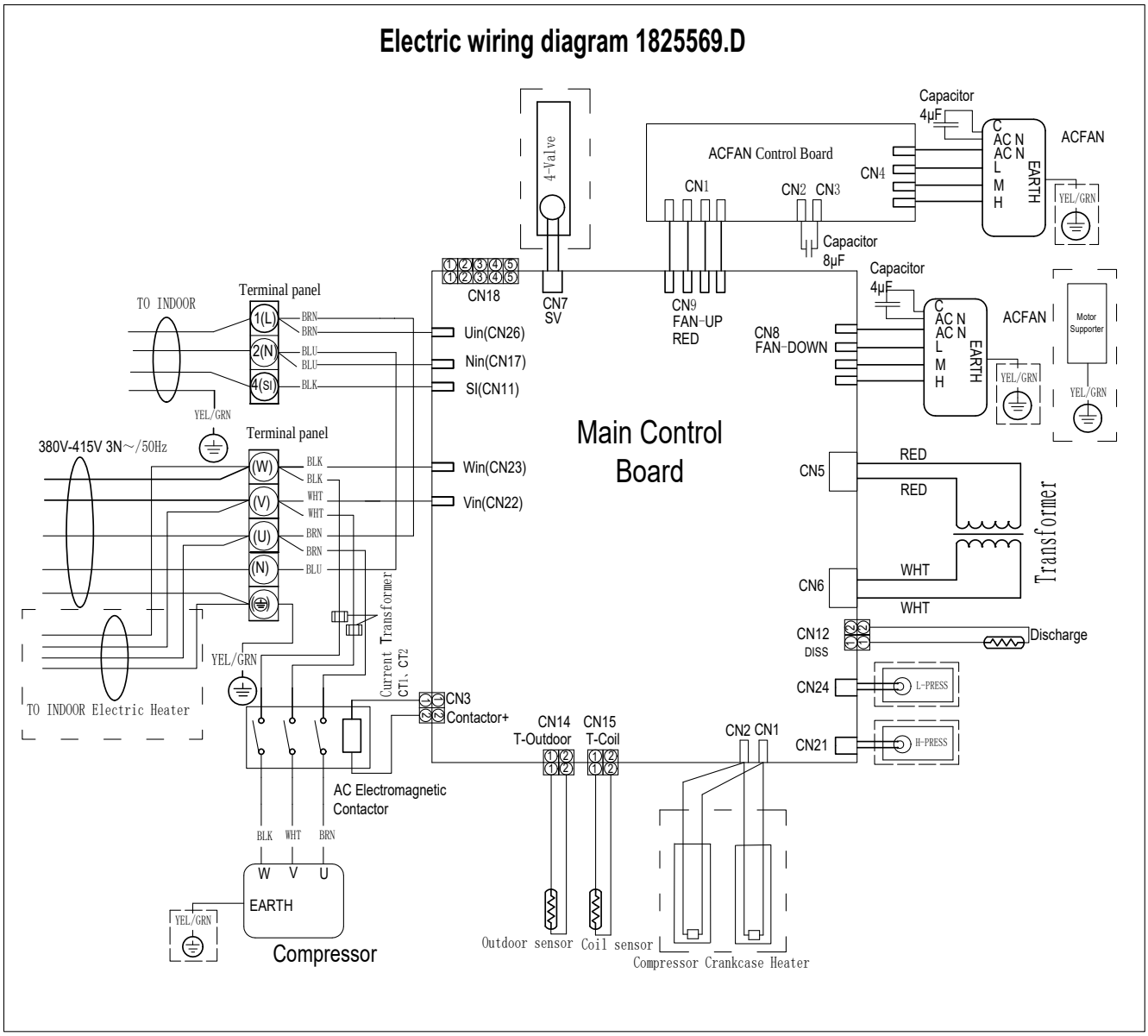

Remark:
Dashed parts are not available in some models.
Details see the table below.

Knbcj	Earth wire for Heat exchanger terminal panel	Earth wire for Motor Supporter	4-Valve/4-way valve &amnj'	Earth wire for Compressor	Compressor Crankcase Heater	Earth wire for AC FAN OR DC FAN	HIGH PRESSURE SWITCH	LOW PRESSURE SWITCH	T-Coil
60K			●	●	●		●	●	●

●--available part

10. WIRING DIAGRAM

10.2 Control board picture

Indoor unit

9K/12K/18K （Duct/Cassette/Floor Ceiling）

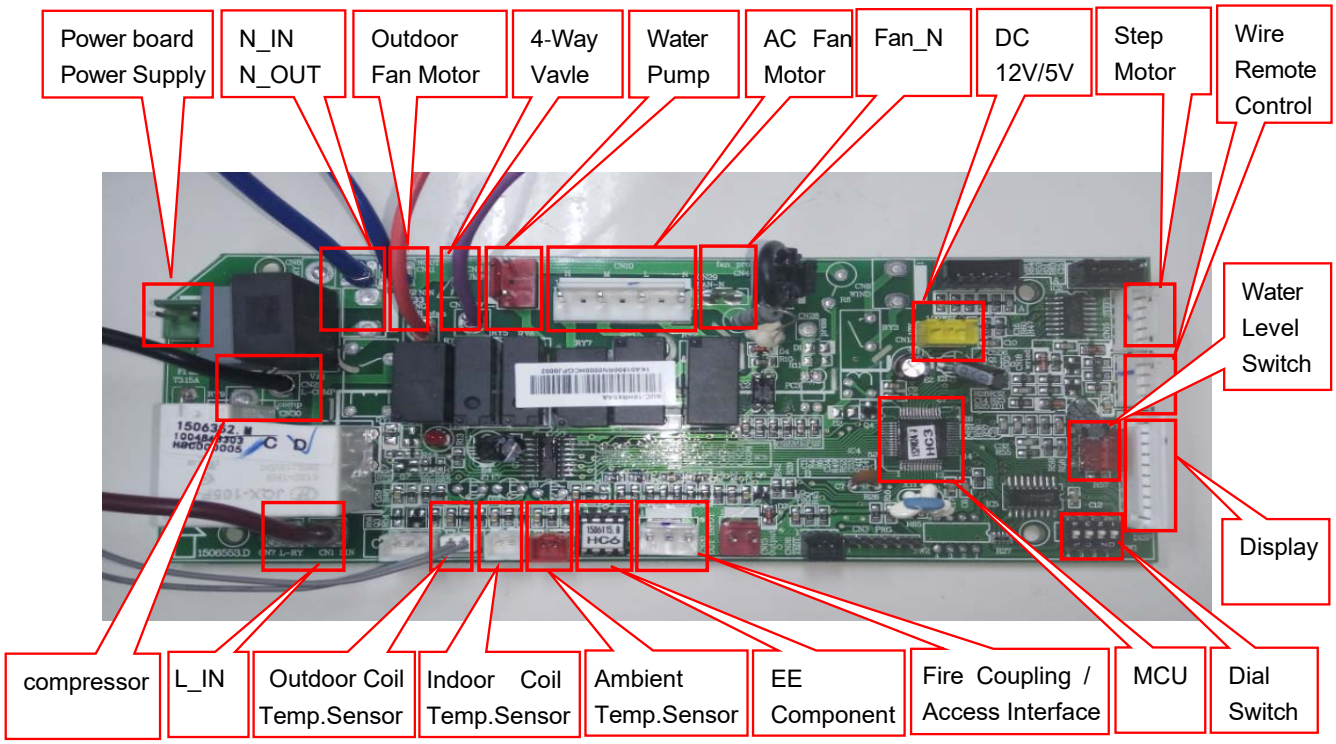

Power board

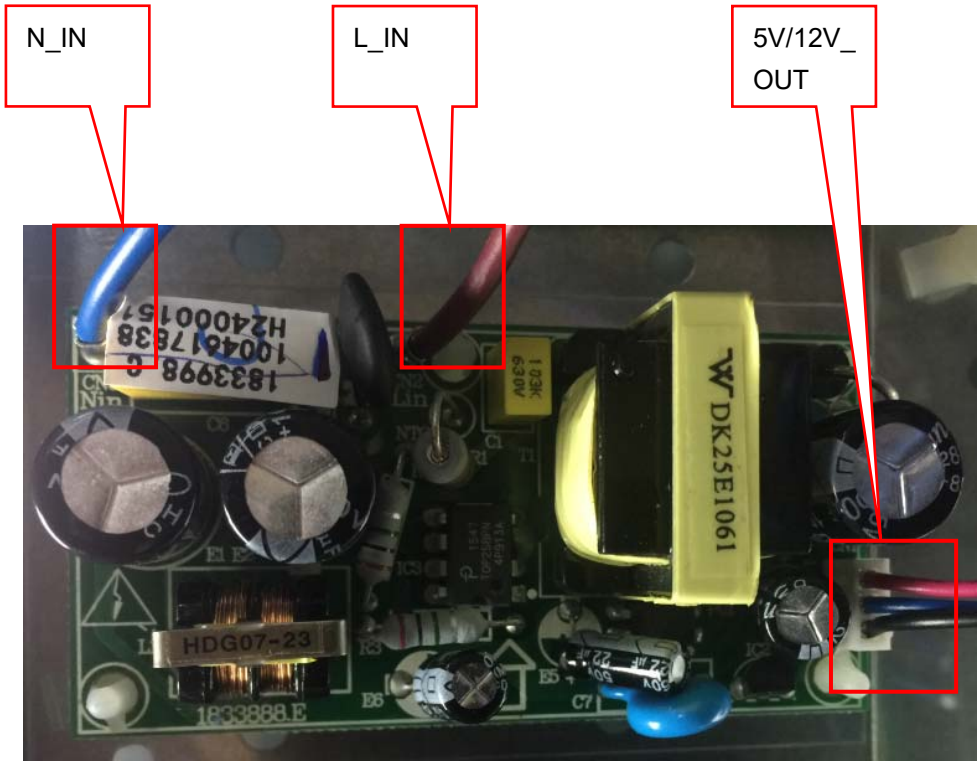

10. WIRING DIAGRAM

24K/36K/48K/60K

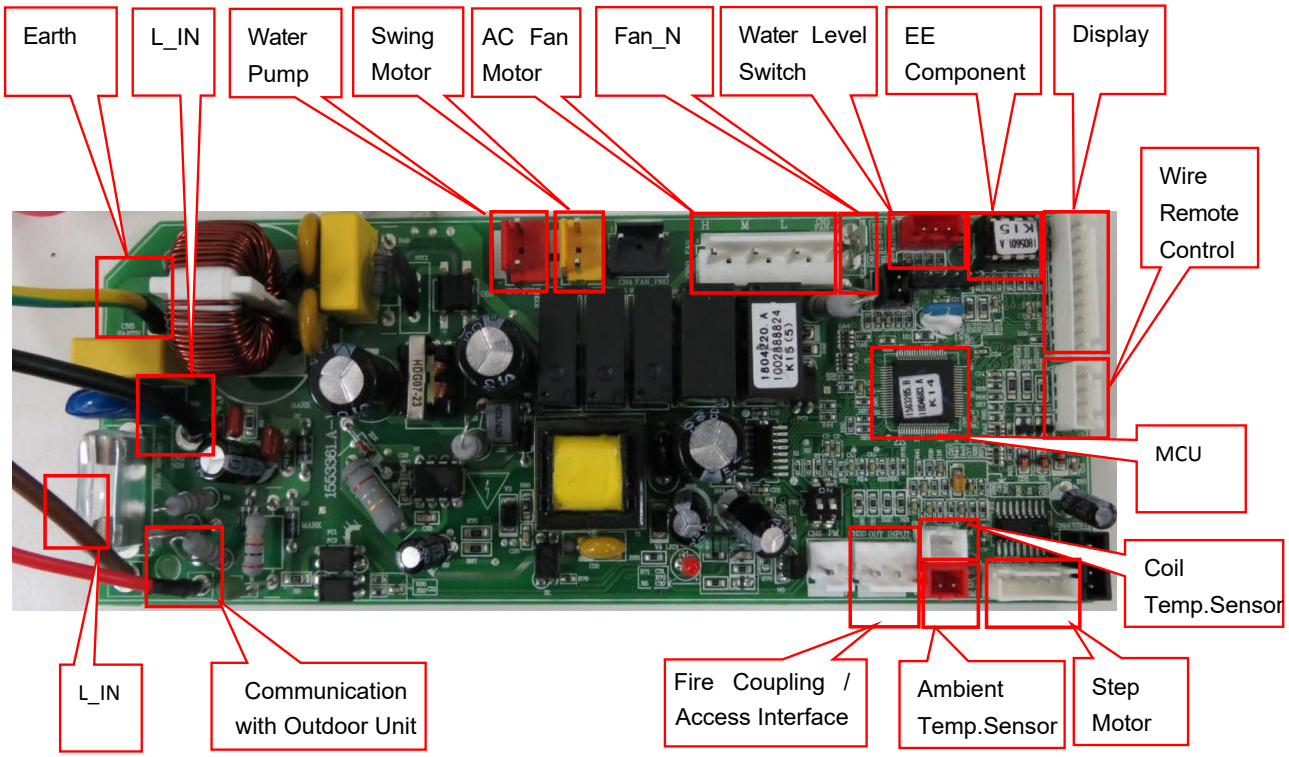

Fan speed adjust board

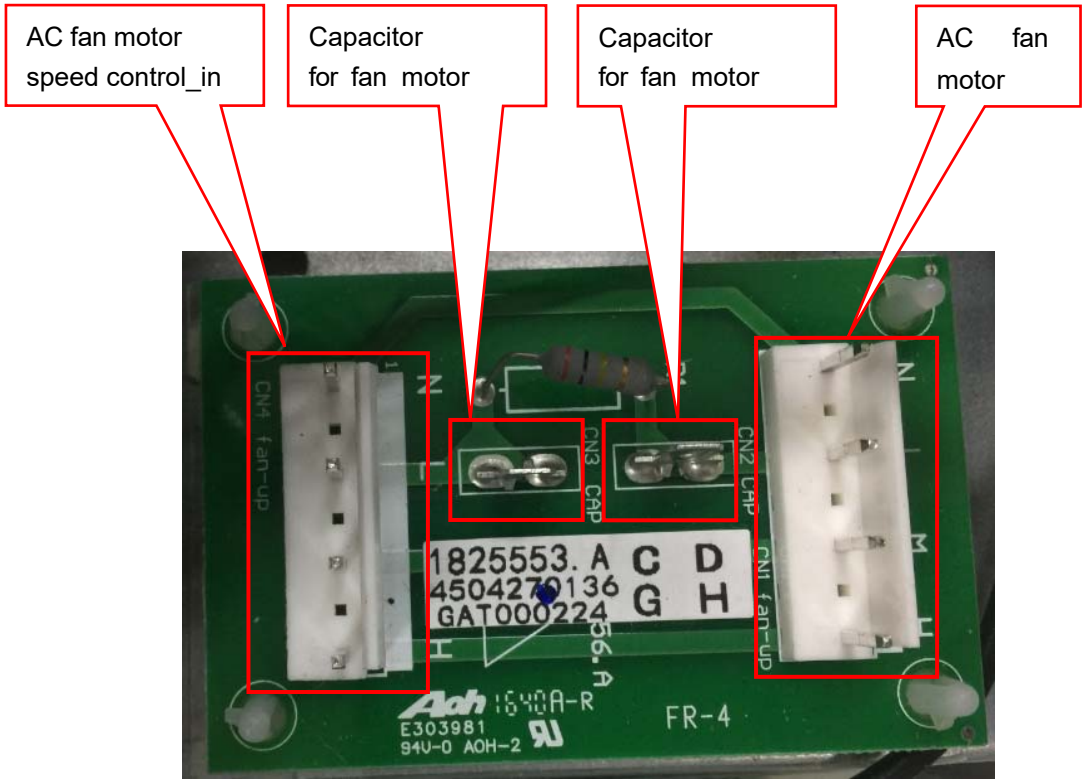

10. WIRING DIAGRAM

Outdoor unit

18K

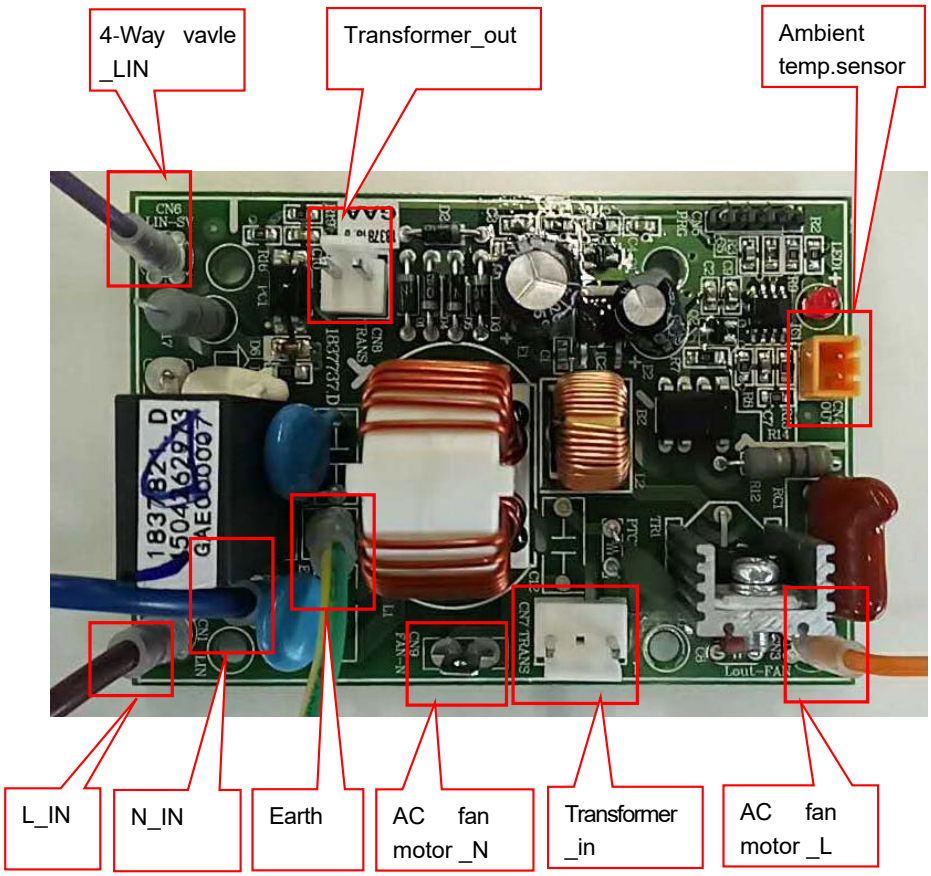

24K

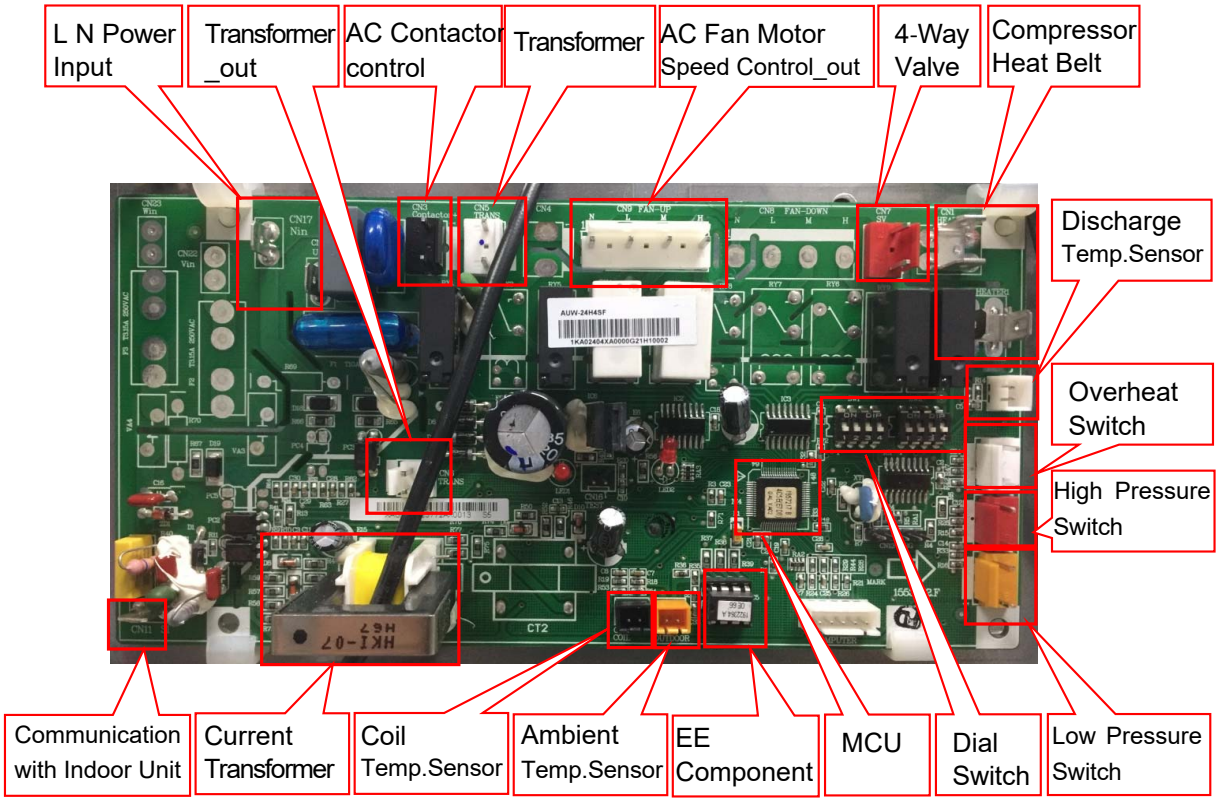

10. WIRING DIAGRAM

36K/48K/60K (Main Control Board)

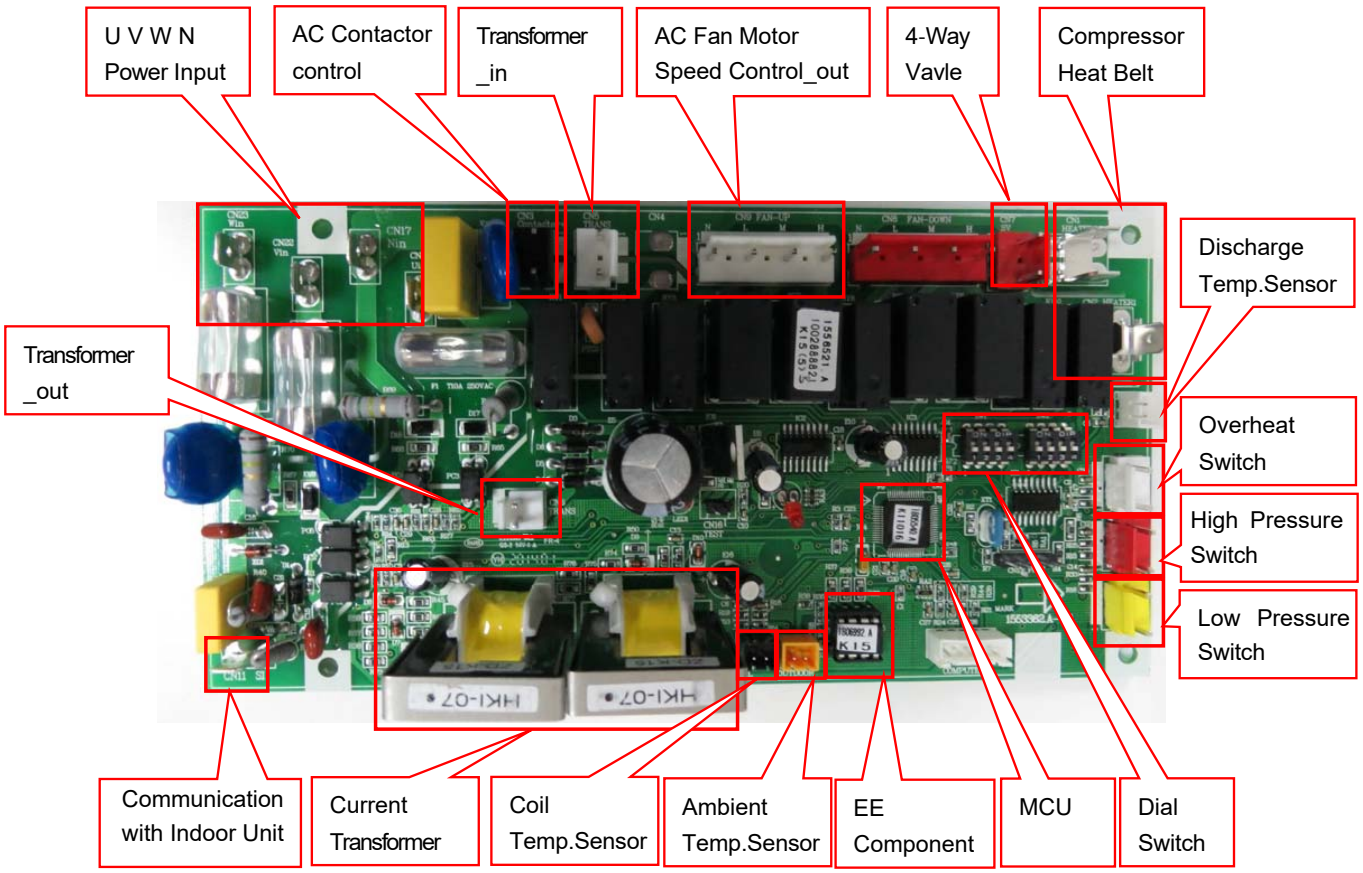

10.3 Field setting

DIP Setting

Dip Switch Setting of Outdoor Unit

TURN OFF all power sources before setting.
Without turning OFF,the switches do not work
and the contents of the setting are invalid,but except the 3rd of dip switches ,it must be turned on when the power is on. Mark of "■" indicates the position of dip switches.

SW1	Optional Function Setting

Setting is required. when optional functions are required.

Function	Automatic defrosting	Manual defrosting	Function	Refrigerant recovery start	
Setting Position	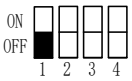	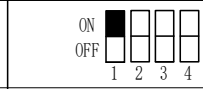	Setting Position	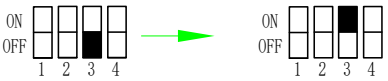	
Function	Silence mode unavailable	Silence mode available	Function	Normal cooling	Forced cooling
Setting Position	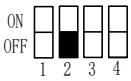	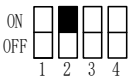	Setting Position	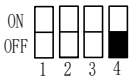	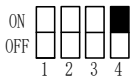

1.Defrosting mode
By default setting is OFF.
OFF ----- Automatic defrosting mode
ON ----- Manual defrosting mode
Operation is valid when the dial is switched from OFF to ON state.
OPERATION:
When the outdoor unit runs in heating mode, and the dial is switched from OFF to ON, then it will run the manual defrosting mode once.
2.Silence mode
By default setting is OFF.
OFF -----Normal mode.
ON---- Silence mode
Operation is valid when the dial is ON.
Silence mode:
Under the silence mode, the outdoor unit fan will run in medium fan speed at most. Under the silence mode state, if there is high pressure protect, discharge temp. protect or cooling overload protect, then it will not enters to silence mode within30minutes.
3.Refrigerant cycle recovery
By default setting is OFF.
OFF -----normal mode.
ON----refrigerant recovery mode
Operation is valid when dial is switched from OFF to ON state.
OPERATION:
When the outdoor unit runs in cooling mode, the dial is switched from OFF to ON, then it will start the refrigerant recovery mode at once.
Refrigerant recovery mode:
During refrigerant recovery mode ,system low pressure protect will not occurs, and compressor will stops after 3 minutes , and will turn to normal state when power on again.
4.Forced cooling mode
By default setting is OFF.
OFF -----normal cooling mode.
ON---- forced cooling
Operation is valid when dial is switched from OFF to ON state before power on.
Forced cooling mode
The outdoor unit will run cooling mode whatever temperature satisfies ON condition or not.Forced cooling mode will run 10 minutes at most, and will cancel automatically after 10 minutes.

10. WIRING DIAGRAM

Static Pressure Setting

Change of Static Pressure

The static pressure outside the indoor unit can be chosen .

You can change the static pressure by changing the fan motor terminal which refer to following figure.

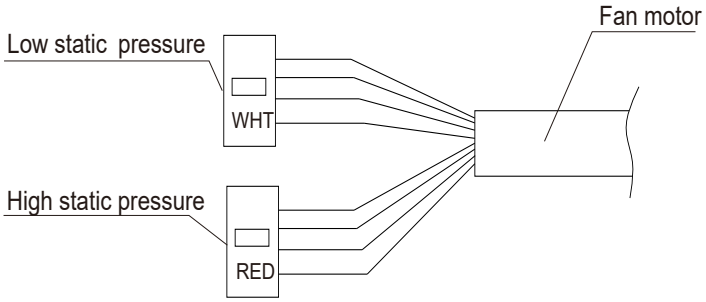

Model (Capacity Btu/h)	Low static pressure	High static pressure
9K/12K/18K	10Pa	30 Pa
24K/36K	50Pa	80 Pa
48K/60K	80Pa	120 Pa

Note: Default Settings is low static pressure by factory.

The noise under high static pressure is higher than low static pressure.

10. WIRING DIAGRAM

Indoor unit parameter revise

Internal control parameter adjustment can be performed using wire remote controller .

1.Connect wire remote controller with indoor un

Step 1:Removing the upper cover of the wired controller

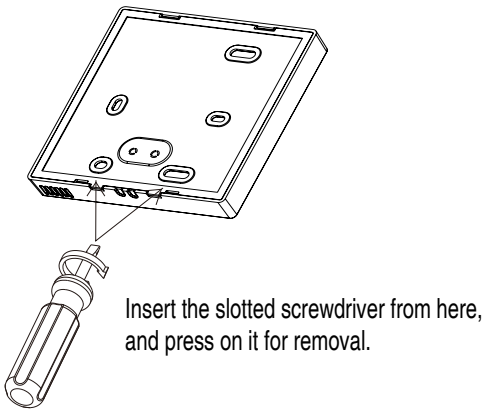

Note:

Control board of the remote controller is placed on upper cover. Please protect it from being scratched during removal and installation!

Step 2: Connecting wired controller with indoor unit

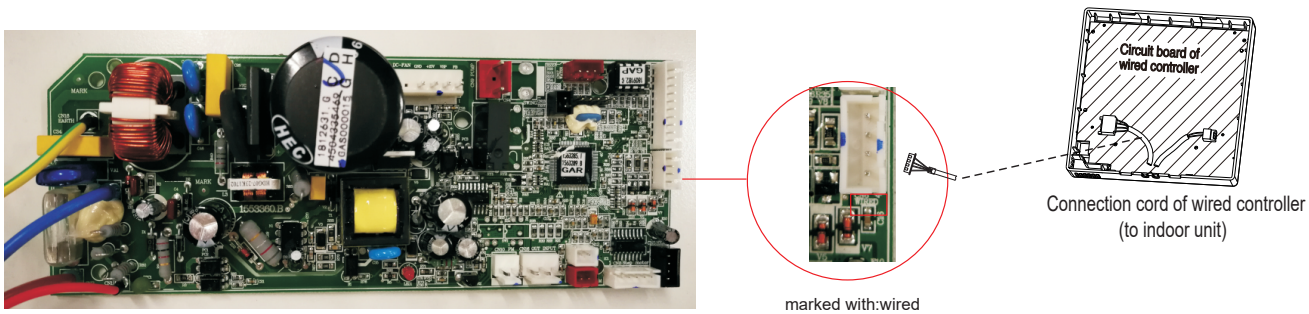

Indoor unit control board

Wired controller

1. Changing system parameter

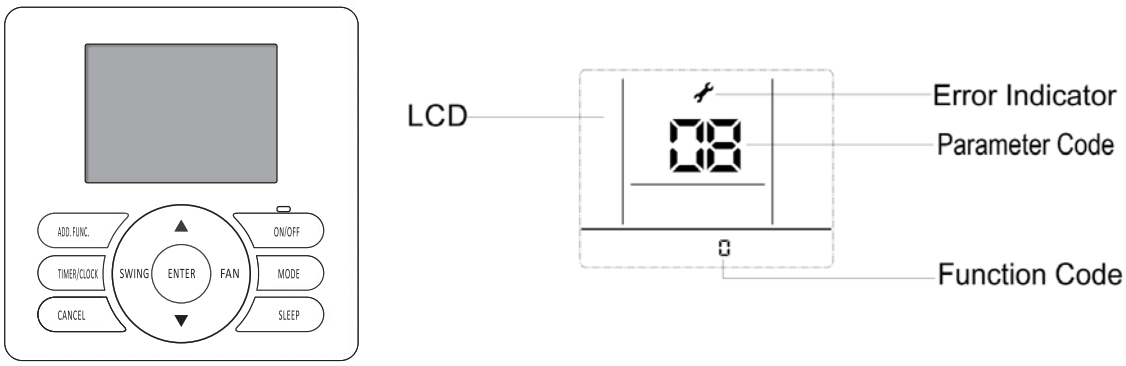

10. WIRING DIAGRAM

OPERATION：

①Hold down both“MODE”button and“ADD.FUNC.”button for 3 seconds, symbol and parameter number blinking at the same time.

②Press“▲”“ ▼ ”button to adjust parameter number until display“17”.
And press“ENTER”button to entering system parameter adaption state, symbol stop blinking, parameter number blink.

③Select desired parameter code by pressing “▲”/ “▼”button following the table below， and press “ENTER” button to confirm.

④Select desired function code by pressing“ ▲”/“▼”button , and press "ENTER" button to confirm.
Press“ON/OFF”button or“CANCEL”button to quit parameter adaption state.

⑤Press“ON/OFF”button or“CANCEL”button to quit.

PARAMETER CODE	PARAMETER DESCRIPTION	PARAMETER VALUE&REPRESENTATION		NOTE
		DATA TYPE	REPRESENTATION (FUNCTION CODE)	
1	Self Recovery of Power Break	Integer	0：Cancel Self Recovery of Power Break function； 1：Set Recovery of Power Break function； others：invalid	
2	Temperature Type	Integer	0：Centigrade Temperature； 1：Fahrenheit Temperature； others：invalid	
3	Temperature Display Type	Integer	0：Default display set temperature； 1：Default display room temperature； others：invalid	
4	Ratio of ambient temperature sensed by indoor temperature sensor(cooling mode)	Integer	0~10valid，more than 10 default is10 0：0%；1：10%；…；10：100%	0:entirely use temperature sensed by wired remote controller; 10:entirely use temperature sensed by indoor unit
5	Filter Clean Indicate	Integer	0：Cancel Filter Clean prompt function； 1：Set Filter Clean prompt function； others：invalid	
6	Filter Clean Time Set	Integer	0~32，more than 32 default is 32*1000h	
7	Installation Height Compensation	Integer	0~10m，more than 10m default is 10. =0,1,2 :no fan speed compensation; =3: increase fan speed; =4~10: increase more fan speed.	Only valid for DC motor cassette indoor unit
8	Cooling Temperature Compensation（indoor unit temperature sensor）	Integer	0：0℃；1：-0.5℃；2：-1℃；3：-1.5℃；4：-2℃；5：-2.5℃；6：-3℃；7：-3.5℃；8：-4℃；9：-4.5℃；10：-5℃； （the wired controller displays integer with the symbol）	Invalid for single control board models
9	Heating Temperature Compensation（indoor unit temperature sensor）	Integer	0：0℃；1：-0.5℃；2：-1℃；3：-1.5℃；4：-2℃；5：-2.5℃；6：-3℃；7：-3.5℃；8：-4℃；9：-4.5℃；10：-5℃；（the wired controller displays integer with the symbol）	Invalid for single control board models
10	Static Pressure Set	Integer	function code=static pressure value, the max. static pressure is different for different models.Default is 0(default static pressure related to specific models)	Ducted type(DC motor)

10. WIRING DIAGRAM

PARAMETER CODE	PARAMETER DESCRIPTION	PARAMETER VALUE&REPRESENTATION		NOTE
		DATA TYPE	REPRESENTATION (FUNCTION CODE)	
12	Ratio of temperature sensed by indoor temperature sensor((Heating mode)	Integer	0~10valid，more than 10 default is10 0：0%；1：10%；…；10：100%	0-entirely use temperature sensed by wired remote controller; 10-entirely use temperature sensed by indoor unit
13	Temperature Adjustment-Cooling	Character	-10~10℃（Single Character with symbol）	Temperature displayed on wired controller
14	Temperature Adjustment-Heating	Character	-10~10℃（Single Character with symbol）	Temperature displayed on wired controller
25	Access control, fire protection function set	Integer	=0，Access control, fire protection functions are all disabled; =1，Access control function is enabled； =2，fire protection function is enabled； =3，Access control, fire protection are all enabled.	

10.4 Running parameter query

Running parameter can be referred by digital tube switch or specified wired remote controller.

Query by wired controller

Operation:

1. Connect wire remote controller with indoor unit(same method as Indoor unit parameter revise)
2. Changing system parameter

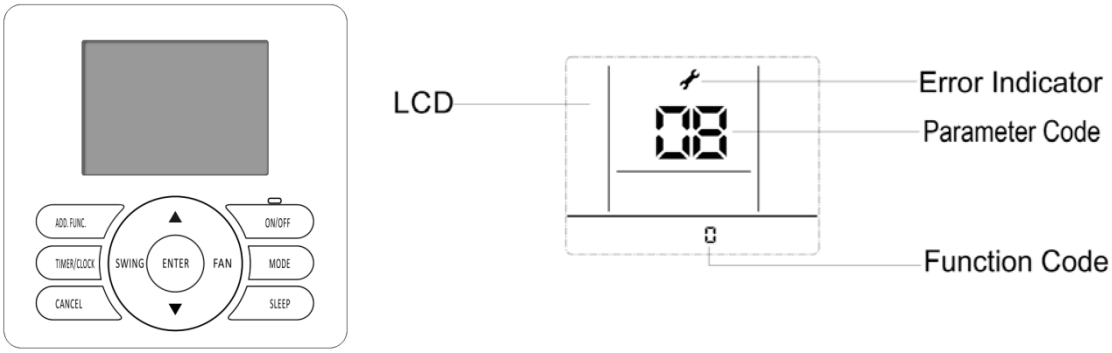

OPERATION：

①Hold down both“MODE”button and“ADD.FUNC.”button for 3 seconds, symbol and parameter number blinking at the same time.

②Press“▲”“ ▼ ”button to select parameter number as you need, parameter value will be displayed on the LCD.

Parameter Code	Parameter Description
06	Indoor unit air inlet temperature
07	Indoor unit coil sensor temperature
08	Outdoor unit ambient sensor temperature
09	Discharge temperature
10	Suction temperature
11	Outdoor coil temperature
12	Discharge pressure
13	Suction pressure
14	Outdoor EEV opening
15	AC current input
16	AC voltage
24	Error code
25	Drive error code
26	Indoor unit air outlet temperature
28	Compressor current
29	Indoor unit room temperature
30	Indoor unit coil inlet temperature
31	Indoor unit coil outlet temperature
32	Outdoor unit condenser inlet temperature
33	Outdoor unit condenser outlet temperature
43	Outdoor unit defrost temperature
57	Outdoor fan 1 speed
58	Outdoor fan 2 speed
60	Indoor fan speed

Note:For some models, some parameter values will not display on the wired controller.

10.5 Setting for Access Control and Fire Protection functions with external input contact

10.5.1 Factory settings

Access Control and Fire Protection functions are both activated by default on new products.

In order to activate or deactivate these functions, use the wired remote controller connected to the indoor unit. Refer to the “Site Setting” chapter in the Technical Catalogue related to this product range to get details about the setting procedure.

10.5.2 Introducing Access Control and Fire Protection functions.

Thanks to these functions, a remote control of the indoor unit from a dry contact is possible. The typical uses of these functions are the following:

- Access control: control of the air conditioning unit in hotel rooms, interconnection with the room key card switch, or in office buildings, interconnection with the window opening contact. For these applications, the purpose of the control function is to block the operation of the air conditioning units when the room is not occupied or when the windows of the office are open.

- Fire protection: interconnection with the fire detection system of any building, to immediately stop the air conditioning units when the fire alarm is triggered.

10.5.3 Function setting

A) Hardware connection

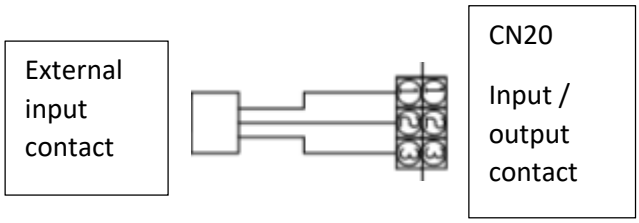

Figure 1: electric wiring diagram

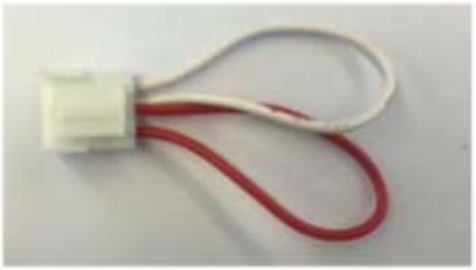

Figure 2: connector with short-circuited wirings

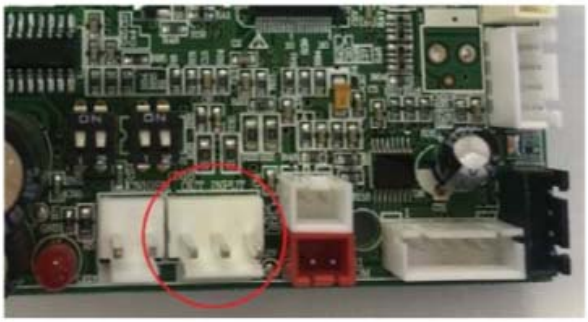

Figure 3 main control board

The input / output terminals on the indoor unit main PCB (see table 1) are designed to be short-circuited by default. From factory, terminals 1-2 and 2-3 are short-circuited using the dedicated connector (figure 2) plugged on the related terminals of the main PCB (CN20 or CN16, see figure 3).

10. WIRING DIAGRAM

Input contact	Series	Model names	Connector ref on main PCB	Electric diagram	Possible function(s)
Input 1 - Red wire	PRIMAIRY R410a Fixed speed	All models	CN20 pins 1&2	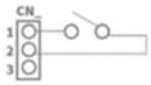	**Access Control** (System parameter 25 set to 1 or 3)
Input 2 - White wire	PRIMAIRY R410a Fixed speed	All models	CN20 pins 2&3	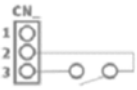	**Fire Protection** (System parameter 25 set to 2 or 3)

Table 1: Inputs at IDU main board

Use of Access Control function:

Cut off the red wire of the connector (figure 2) and connect the related terminals to the Access Control switch of the installation (room key card switch or window opening control switch for example). The connection wire shall be 22AWG type. Logic control of the Access Control function:

- Normal conditions: control switch is closed, normal operation of the indoor unit is allowed.
- Access Control triggered: control switch is open, indoor unit is set OFF, remote controller is blocked.

Use of Fire Protection function:

Cut off the white wire of the connector (figure 2) and connect the related terminals to the Fore Protection switch of the installation. The connection wire shall be 22AWG type. Logic control of the Fire Protection function:

- Normal conditions: control switch is closed, normal operation of the indoor unit is allowed
- Fire Protection triggered: control switch is open, indoor unit is set OFF, remote controller is blocked.

B) Timing sequence description

Access Control function:

- When the contact is opened (key card remove, window opened), the air conditioning unit is stopped once the contact has been opened for 30 seconds. Once indoor unit is stopped, the operations from the remote controllers (wired or wireless) are prohibited: indoor unit will not follow any command sent from the wired or the wireless controller. The status of the indoor unit on the wired controller will be “OFF” status.

- When contact is closed again (key card inserted again or window closed), **the air conditioning unit operation is released, and the previous operation status and settings are restored**:

- o If the air conditioning unit is OFF when the contact is opened, the unit will remain in OFF status when the contact is closed again.
- o If the air conditioning unit is ON when the contact is opened, the unit will be automatically restarted with the same settings when the contact is closed again.

Fire Protection function:

- When the contact is opened (fire protection triggered), the air conditioning unit is stopped once the contact has been opened for 3 seconds. This is done to avoid keeping the air conditioning unit blowing air when a fire has been detected. Once indoor unit is stopped, the operations from the remote controllers (wired or wireless) are prohibited: indoor unit will not follow any command sent from the wired or the wireless controller. The status of the indoor unit on the wired controller will be “OFF” status.

- When contact is closed again (fire protection released or not triggered), the air conditioning unit operation is released and set to OFF status. The user may restart the unit from the wired or wireless controller if necessary.

10.6 Common wiring

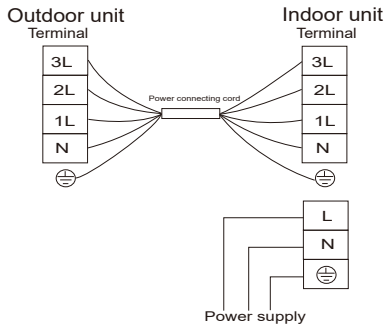

9K/12K/18K

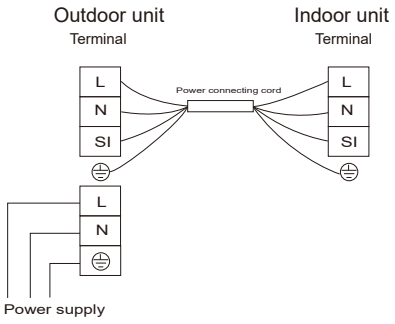

24K&36K(single-phase type)

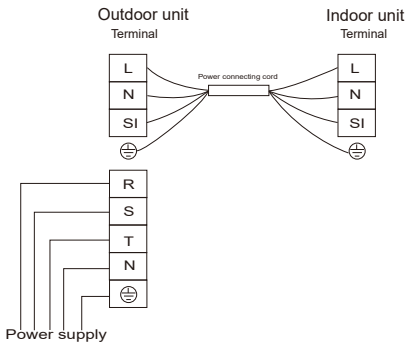

36K/48K/60K

Recommend Wire Size

Model Capacity(Btu/h)	Power Supply	ELB		Power Source Cable Size	Transmitting Cable Size
		Nominal Current(A)	Nominal Sensitive Current (mA)	EN60335-1	EN60335-1
9K/12K	220-240V ~,50Hz	16	30	3×2. 5mm^2	5×1. 5mm^2
18K	220-240V ~,50Hz	20	30	3×2. 5mm^2	5×1. 5mm^2
24K	220-240V ~,50Hz	32	30	3×4. 0mm^2	4×1. 5mm^2
36K(single-phase type)	220-240V ~,50Hz	40	30	3×4. 0mm^2	4×1. 5mm^2
36K(3-phase type)	380-415V 3N~,50Hz	40	30	5×2. 5mm^2	4×1. 5mm^2
48K/60K	380-415V 3N~,50Hz	32	30	5×2. 5mm^2	4×1. 5mm^2

Max. Running Current(A): REFER TO NAMEPLATE

10. WIRING DIAGRAM

● Use an ELB (Electric Leakage Breaker). If not used, it will cause an electric shock or a fire.

● Do not operate the system until all the check points have been cleared.

(A) Check to ensure that the insulation resistance is more than 2 MΩ, by measuring the resistance between ground and the terminal of the electrical parts. If not, do not operate the system until the electrical leakage is found and repaired.

(B) Check to ensure that the stop valves of the outdoor unit are fully opened and then start the system.

● Pay attention to the following items while the system is running.

(A) Do not touch any of the parts by hand at the discharge gas side, since the compressor chamber and the pipes at the discharge side are heated higher than 90℃.

(B) DO NOT PUSH THE BUTTON OF THE MAGNETIC SWITCH(ES). It will cause a serious Accident.

NOTES:

1) Follow local codes and regulations when selecting field wires.

2) The wire sizes marked in the table are selected at the maximum current of the unit according to the European Standard ,En60335-1. Use the wires which are not lighter than the ordinary tough rubber sheathed flexible cord (code designation H07RN-F) or ordinary polychloroprene sheathed flexible cord (code designation H07RN-F) .

3) Use a shielded cable for the transmitting circuit and connect it to ground .

4) In the case that power cables are connected in series, add each unit maximum current and select wires below.

Selection According to EN60335-1

Current i(A)	Wire Size(mm^2)
i≤6	0. 75
6<i≤10	1
10<i≤16	1. 5
16<i≤25	2. 5
25<i≤32	4
32<i≤40	6
40<i≤63	10
63<i	*

* in the case that current exceeds 63A, do not connect cables in series.

10.7 Sensor parameter

1. THE PARAMETER OF OUTDOOR COMPRESSOR DISCHARGE TEMPERATURE SENSOR:

（R_0=187.25K±6.3%；R_{100}=3.77K±2.5K；B0/100=3979K±1%）

T [℃]	Rmin [KΩ]	Rnom [KΩ]	Rmax [KΩ]	DR(MIN)%	DR(MAX)%
-30	908.2603	985.5274	1065.1210	-7.84	7.47
-29	855.3955	927.6043	1001.9150	-7.78	7.42
-28	805.9244	873.4324	924.8368	-7.73	5.56
-27	759.6097	822.7471	887.5944	-7.67	7.31
-26	716.2320	775.3041	835.9165	-7.62	7.25
-25	675.5881	730.8775	787.5529	-7.56	7.20
-24	637.4902	689.2583	742.2720	-7.51	7.14
-23	601.7645	650.2533	699.8601	-7.46	7.09
-22	568.2499	613.6835	660.1191	-7.40	7.03
-21	536.7970	579.3832	622.8658	-7.35	6.98
-20	507.2676	547.1989	587.9307	-7.30	6.93
-19	497.5332	516.9882	555.1565	-3.76	6.88
-18	453.4748	488.6192	524.3977	-7.19	6.82
-17	428.9819	461.9693	495.5191	-7.14	6.77
-16	405.9517	436.9251	486.3954	-7.09	10.17
-15	384.2888	413.3808	442.9105	-7.04	6.67
-14	363.9047	391.2386	418.9563	-6.99	6.62
-13	344.7169	370.4072	396.4325	-6.94	6.56
-12	326.6497	350.8019	375.2461	-6.88	6.51
-11	309.6286	332.3441	355.3104	-6.83	6.46
-10	293.5903	314.9620	336.5448	-6.79	6.41
-9	278.4719	298.5822	318.3744	-6.74	6.22
-8	264.2156	283.1464	302.2294	-6.69	6.31
-7	250.7678	268.5936	286.5448	-6.64	6.26
-6	238.0783	254.8686	271.7603	-6.59	6.22
-5	226.1003	241.9200	257.8193	-6.54	6.17
-4	214.7903	229.6997	244.6593	-6.49	6.11
-3	204.1073	218.1630	232.2612	-6.44	6.07
-2	194.0135	207.2681	220.5495	-6.39	6.02
-1	184.4732	196.9759	209.4913	-6.35	5.97
0	175.4533	187.2500	199.0468	-6.30	5.93
1	166.8952	178.0255	189.1529	-6.25	5.88
2	158.8023	169.3067	179.8058	-6.20	5.84
3	151.1467	161.0633	170.9724	-6.16	5.80
4	143.9026	153.2667	162.6216	-6.11	5.75
5	137.0455	145.8905	154.7246	-6.06	5.71
6	130.5528	138.9097	147.2544	-6.02	5.67
7	124.4033	132.3011	140.1856	-5.97	5.62
8	118.5769	126.0429	133.4946	-5.92	5.58
9	113.0550	120.1146	127.1591	-5.88	5.54
10	107.8202	114.4973	121.1586	-5.83	5.50
11	102.8560	109.1728	115.4734	-5.79	5.46
12	98.1470	104.1246	110.0855	-5.74	5.41
13	93.6787	99.3367	104.9778	-5.70	5.37
14	89.4378	94.7946	100.1342	-5.65	5.33
15	85.4114	90.4842	95.5398	-5.61	5.29
16	81.5875	86.3926	91.1805	-5.56	5.25
17	77.9551	82.5076	87.0430	-5.52	5.21
18	74.5034	78.8177	83.1150	-5.47	5.17

10. WIRING DIAGRAM

T [℃]	Rmin [KΩ]	Rnom [KΩ]	Rmax [KΩ]	DR(MIN)%	DR(MAX)%
19	71.2227	75.3122	79.3848	-5.43	5.13
20	68.1036	71.9808	75.8414	-5.39	5.09
21	65.1373	68.8141	72.4746	-5.34	5.05
22	62.3155	65.8032	69.2746	-5.30	5.01
23	59.6306	62.9395	66.2324	-5.26	4.97
24	57.0752	60.2152	63.3395	-5.21	4.93
25	54.6424	57.6227	60.5877	-5.17	4.89
26	52.3258	55.1551	57.9695	-5.13	4.85
27	50.1192	52.8058	55.4778	-5.09	4.82
28	48.0168	50.5684	53.1058	-5.05	4.78
29	46.0133	48.4371	50.8472	-5.00	4.74
30	44.1034	46.4046	48.6960	-4.96	4.71
31	42.2825	44.4711	46.6466	-4.92	4.66
32	40.5458	42.6261	44.6937	-4.88	4.63
33	38.8891	40.8668	42.8323	-4.84	4.59
34	37.3084	39.1890	41.0576	-4.80	4.55
35	35.7998	37.5883	39.3653	-4.76	4.51
36	34.3596	36.0609	37.7511	-4.72	4.48
37	32.9844	34.6030	36.2109	-4.68	4.44
38	31.6710	33.2113	34.7412	-4.64	4.40
39	30.4164	31.8823	33.3383	-4.60	4.37
40	29.2176	30.6130	31.9988	-4.56	4.33
41	28.0718	29.4004	30.7197	-4.52	4.29
42	26.9765	28.2417	29.4979	-4.48	4.26
43	25.9293	27.1342	28.3306	-4.44	4.22
44	24.9277	26.0755	27.2150	-4.40	4.19
45	23.9697	25.0632	26.1488	-4.36	4.15
46	23.0530	24.0950	25.1293	-4.32	4.12
47	22.1757	23.1688	24.1545	-4.29	4.08
48	21.3360	22.2826	23.2221	-4.25	4.05
49	20.5321	21.4345	22.3301	-4.21	4.01
50	19.7623	20.6226	21.4766	-4.17	3.98
51	19.0261	19.8468	20.6612	-4.14	3.94
52	18.3211	19.1040	19.8808	-4.10	3.91
53	17.6458	18.3926	19.1338	-4.06	3.87
54	16.9986	17.7113	18.4185	-4.02	3.84
55	16.3784	17.0537	17.7335	-3.96	3.83
56	15.7839	16.4332	17.0774	-3.95	3.77
57	15.2139	15.8338	16.4488	-3.92	3.74
58	14.6673	15.2592	15.8464	-3.88	3.71
59	14.1430	14.7083	15.2690	-3.84	3.67
60	13.6400	14.1799	14.7154	-3.81	3.64
61	13.1573	13.6730	14.1846	-3.77	3.61
62	12.6941	13.1868	13.6756	-3.74	3.57
63	12.2494	12.7202	13.1872	-3.70	3.54
64	11.8224	12.2723	12.7186	-3.67	3.51
65	11.4124	11.8424	12.2690	-3.63	3.48
66	11.0185	11.4295	11.8373	-3.60	3.45
67	10.6401	11.0331	11.4230	-3.56	3.41
68	10.2765	10.6522	11.0251	-3.53	3.38
69	9.9271	10.2863	10.6429	-3.49	3.35
70	9.5912	9.9348	10.2756	-3.46	3.32
71	9.2682	9.5968	9.9231	-3.42	3.29
72	8.9576	9.2720	9.5841	-3.39	3.26
73	8.6589	8.9597	9.2583	-3.36	3.23
74	8.3716	8.6594	8.9451	-3.32	3.19
75	8.0951	8.3705	8.6440	-3.29	3.16

10. WIRING DIAGRAM

T [℃]	Rmin [KΩ]	Rnom [KΩ]	Rmax [KΩ]	DR(MIN)%	DR(MAX)%
76	7.8290	8.0926	8.3544	-3.26	3.13
77	7.5730	7.8252	8.0758	-3.22	3.10
78	7.3264	7.5679	7.8078	-3.19	3.07
79	7.0891	7.3202	7.5499	-3.16	3.04
80	6.8605	7.0818	7.3018	-3.12	3.01
81	6.6403	6.8522	7.0629	-3.09	2.98
82	6.4282	6.6311	6.8329	-3.06	2.95
83	6.2239	6.4182	6.6115	-3.03	2.92
84	6.0269	6.2131	6.3982	-3.00	2.89
85	5.8371	6.0154	6.1928	-2.96	2.86
86	5.6542	5.8249	5.9949	-2.93	2.84
87	5.4777	5.6413	5.8042	-2.90	2.81
88	5.3076	5.4644	5.6205	-2.87	2.78
89	5.1435	5.2937	5.4433	-2.84	2.75
90	4.9853	5.1292	5.2726	-2.81	2.72
91	4.8326	4.9705	5.1079	-2.77	2.69
92	4.6852	4.8174	4.9492	-2.74	2.66
93	4.5430	4.6697	4.7960	-2.71	2.63
94	4.4058	4.5272	4.6483	-2.68	2.61
95	4.2733	4.3896	4.5058	-2.65	2.58
96	4.1453	4.2568	4.3683	-2.62	2.55
97	4.0218	4.1287	4.2355	-2.59	2.52
98	3.9024	4.0049	4.1074	-2.56	2.50
99	3.7872	3.8854	3.9837	-2.53	2.47
100	3.6758	3.7700	3.8643	-2.50	2.44
101	3.5661	3.6585	3.7512	-2.53	2.47
102	3.4601	3.5509	3.6419	-2.56	2.50
103	3.3577	3.4468	3.5362	-2.59	2.53
104	3.2588	3.3463	3.4341	-2.61	2.56
105	3.1632	3.2491	3.3353	-2.64	2.58
106	3.0708	3.1551	3.2398	-2.67	2.61
107	2.9816	3.0643	3.1475	-2.70	2.64
108	2.8953	2.9765	3.0582	-2.73	2.67
109	2.8118	2.8915	2.9717	-2.76	2.70
110	2.7311	2.8093	2.8881	-2.78	2.73
111	2.6531	2.7299	2.8072	-2.81	2.75
112	2.5776	2.6530	2.7289	-2.84	2.78
113	2.5046	2.5785	2.6531	-2.87	2.81
114	2.4340	2.5065	2.5798	-2.89	2.84
115	2.3656	2.4368	2.5087	-2.92	2.87
116	2.2995	2.3693	2.4400	-2.95	2.90
117	2.2354	2.3040	2.3733	-2.98	2.92
118	2.1734	2.2407	2.3088	-3.00	2.95
119	2.1134	2.1795	2.2463	-3.03	2.97
120	2.0553	2.1201	2.1858	-3.06	3.01
121	1.9991	2.0626	2.1271	-3.08	3.03
122	1.9446	2.0070	2.0702	-3.11	3.05
123	1.8918	1.9530	2.0151	-3.13	3.08
124	1.8406	1.9007	1.9617	-3.16	3.11
125	1.7911	1.8500	1.9099	-3.18	3.14
126	1.7430	1.8009	1.8597	-3.22	3.16
127	1.6965	1.7533	1.8110	-3.24	3.19
128	1.6514	1.7071	1.7638	-3.26	3.21
129	1.6076	1.6623	1.7180	-3.29	3.24
130	1.5652	1.6189	1.6736	-3.32	3.27

2. THE PARAMETER OF THE OTHER SENSOR IN INDOOR AND OUTDOOR UNIT：（R_0=15K±2%；B0/100=3450K±2%）

T [℃]	Rmin [KΩ]	Rnom [KΩ]	Rmax [KΩ]	DR(MIN)%	DR(MAX)%
-30	60.78	64.77	68.99	-6.16	6.12
-29	57.75	61.36	65.16	-5.88	5.83
-28	54.89	58.15	61.58	-5.61	5.57
-27	52.19	55.14	58.23	-5.35	5.31
-26	49.63	52.30	55.08	-5.11	5.05
-25	47.21	49.62	52.13	-4.86	4.81
-24	44.92	47.10	49.37	-4.63	4.60
-23	42.76	44.73	46.78	-4.40	4.38
-22	40.71	42.49	44.34	-4.19	4.17
-21	38.77	40.38	42.05	-3.99	3.97
-20	36.93	38.39	39.90	-3.80	3.78
-19	35.18	36.51	37.87	-3.64	3.59
-18	33.53	34.74	35.97	-3.48	3.42
-17	31.96	33.06	34.17	-3.33	3.25
-16	30.48	31.47	32.49	-3.15	3.14
-15	29.07	29.97	30.89	-3.00	2.98
-14	27.73	28.56	29.39	-2.91	2.82
-13	26.46	27.22	27.98	-2.79	2.72
-12	25.26	25.95	26.64	-2.66	2.59
-11	24.11	24.75	25.38	-2.59	2.48
-10	23.03	23.61	24.19	-2.46	2.40
-9	21.99	22.53	23.06	-2.40	2.30
-8	21.01	21.51	22.00	-2.32	2.23
-7	20.08	20.54	20.99	-2.24	2.14
-6	19.19	19.62	20.04	-2.19	2.10
-5	18.35	18.74	19.14	-2.08	2.09
-4	17.55	17.92	18.29	-2.06	2.02
-3	16.78	17.13	17.48	-2.04	2.00
-2	16.06	16.38	16.71	-1.95	1.97
-1	15.36	15.67	15.98	-1.98	1.94
0	14.70	15.00	15.29	-2.00	1.90
1	14.08	14.36	14.64	-1.95	1.91
2	13.48	13.75	14.02	-1.96	1.93
3	12.91	13.17	13.43	-1.97	1.94
4	12.36	12.62	12.87	-2.06	1.94
5	11.85	12.09	12.34	-1.99	2.03
6	11.35	11.59	11.83	-2.07	2.03
7	10.88	11.11	11.35	-2.07	2.11
8	10.43	10.66	10.89	-2.16	2.11
9	9.999	10.230	10.450	-2.26	2.11

10. WIRING DIAGRAM

T [℃]	Rmin [KΩ]	Rnom [KΩ]	Rmax [KΩ]	DR(MIN)%	DR(MAX)%
10	9.590	9.816	10.040	-2.30	2.23
11	9.199	9.422	9.647	-2.37	2.33
12	8.826	9.047	9.269	-2.44	2.40
13	8.470	8.689	8.910	-2.52	2.48
14	8.129	8.347	8.567	-2.61	2.57
15	7.804	8.021	8.240	-2.71	2.66
16	7.493	7.709	7.928	-2.80	2.76
17	7.196	7.412	7.630	-2.91	2.86
18	6.912	7.127	7.346	-3.02	2.98
19	6.640	6.855	7.074	-3.14	3.10
20	6.381	6.595	6.815	-3.24	3.23
21	6.132	6.347	6.567	-3.39	3.35
22	5.894	6.109	6.330	-3.52	3.49
23	5.667	5.882	6.103	-3.66	3.62
24	5.449	5.664	5.886	-3.80	3.77
25	5.240	5.456	5.678	-3.96	3.91
26	5.048	5.260	5.478	-4.03	3.98
27	4.864	5.072	5.286	-4.10	4.05
28	4.687	4.891	5.101	-4.17	4.12
29	4.517	4.717	4.924	-4.24	4.20
30	4.355	4.550	4.753	-4.29	4.27
31	4.198	4.390	4.589	-4.37	4.34
32	4.048	4.236	4.431	-4.44	4.40
33	3.904	4.089	4.280	-4.52	4.46
34	3.766	3.946	4.134	-4.56	4.55
35	3.663	3.810	3.994	-3.86	4.61
36	3.506	3.679	3.859	-4.70	4.66
37	3.383	3.552	3.729	-4.76	4.75
38	3.265	3.431	3.604	-4.84	4.80
39	3.152	3.314	3.484	-4.89	4.88
40	3.043	3.202	3.368	-4.97	4.93
41	2.938	3.094	3.257	-5.04	5.00
42	2.838	2.990	3.149	-5.08	5.05
43	2.741	2.890	3.046	-5.16	5.12
44	2.648	2.793	2.946	-5.19	5.19
45	2.558	2.701	2.850	-5.29	5.23
46	2.472	2.611	2.758	-5.32	5.33
47	2.389	2.525	2.669	-5.39	5.40
48	2.309	2.443	2.583	-5.49	5.42
49	2.232	2.363	2.500	-5.54	5.48
50	2.158	2.286	2.421	-5.60	5.58
51	2.087	2.212	2.344	-5.65	5.63
52	2.018	2.140	2.269	-5.70	5.69

10. WIRING DIAGRAM

T [℃]	Rmin [KΩ]	Rnom [KΩ]	Rmax [KΩ]	DR(MIN)%	DR(MAX)%
53	1.952	2.072	2.198	-5.79	5.73
54	1.888	2.005	2.129	-5.84	5.82
55	1.827	1.941	2.062	-5.87	5.87
56	1.767	1.880	1.998	-6.01	5.91
57	1.710	1.820	1.936	-6.04	5.99
58	1.655	1.763	1.876	-6.13	6.02
59	1.602	1.707	1.818	-6.15	6.11
60	1.551	1.654	1.762	-6.23	6.13
61	1.502	1.602	1.709	-6.24	6.26
62	1.452	1.553	1.657	-6.50	6.28
63	1.409	1.505	1.606	-6.38	6.29
64	1.364	1.458	1.558	-6.45	6.42
65	1.322	1.413	1.511	-6.44	6.49
66	1.280	1.370	1.466	-6.57	6.55
67	1.241	1.328	1.422	-6.55	6.61
68	1.202	1.288	1.379	-6.68	6.60
69	1.165	1.249	1.339	-6.73	6.72
70	1.129	1.211	1.299	-6.77	6.77
71	1.095	1.175	1.261	-6.81	6.82
72	1.061	1.140	1.224	-6.93	6.86
73	1.029	1.106	1.188	-6.96	6.90
74	0.9977	1.073	1.153	-7.02	6.94
75	0.9676	1.041	1.120	-7.05	7.05
76	0.9385	1.011	1.088	-7.17	7.08
77	0.9104	0.9810	1.056	-7.20	7.10
78	0.8833	0.9523	1.026	-7.25	7.18
79	0.8570	0.9246	0.9971	-7.31	7.27
80	0.8316	0.8977	0.9687	-7.36	7.33
81	0.8071	0.8717	0.9412	-7.41	7.38
82	0.7834	0.8466	0.9146	-7.47	7.43
83	0.7604	0.8223	0.8888	-7.53	7.48
84	0.7382	0.7987	0.8639	-7.57	7.55
85	0.7167	0.7759	0.8397	-7.63	7.60
86	0.6958	0.7537	0.8161	-7.68	7.65
87	0.6755	0.7322	0.7933	-7.74	7.70
88	0.6560	0.7114	0.7712	-7.79	7.75
89	0.6371	0.6913	0.7498	-7.84	7.80
90	0.6188	0.6718	0.7291	-7.89	7.86
91	0.6011	0.6530	0.7051	-7.95	7.39
92	0.5840	0.6348	0.6897	-8.00	7.96
93	0.5674	0.6171	0.6709	-8.05	8.02
94	0.5514	0.6000	0.6527	-8.10	8.07
95	0.5359	0.5835	0.6350	-8.16	8.11

10. WIRING DIAGRAM

T [℃]	Rmin [KΩ]	Rnom [KΩ]	Rmax [KΩ]	DR(MIN)%	DR(MAX)%
96	0.5209	0.5675	0.6179	-8.21	8.16
97	0.5064	0.5519	0.6014	-8.24	8.23
98	0.4923	0.5369	0.5853	-8.31	8.27
99	0.4787	0.5224	0.5698	-8.37	8.32
100	0.4655	0.5083	0.5547	-8.42	8.36
101	0.4528	0.4946	0.5401	-8.45	8.42
102	0.4404	0.4814	0.5259	-8.52	8.46
103	0.4284	0.4685	0.5121	-8.56	8.51
104	0.4168	0.4561	0.4988	-8.62	8.56
105	0.4056	0.4440	0.4859	-8.65	8.62
106	0.3947	0.4323	0.4733	-8.70	8.66
107	0.3841	0.4210	0.4611	-8.76	8.70
108	0.3739	0.4100	0.4493	-8.80	8.75
109	0.3640	0.3993	0.4379	-8.84	8.81
110	0.3544	0.3890	0.4267	-8.89	8.84
111	0.3450	0.3789	0.4159	-8.95	8.90
112	0.3360	0.3692	0.4055	-8.99	8.95
113	0.3272	0.3597	0.3953	-9.04	9.01
114	0.3187	0.3505	0.3854	-9.07	9.06
115	0.3104	0.3416	0.3758	-9.13	9.10
116	0.3024	0.3330	0.3665	-9.19	9.14
117	0.2947	0.3246	0.3574	-9.21	9.18
118	0.2871	0.3164	0.3468	-9.26	8.77
119	0.2798	0.3085	0.3401	-9.30	9.29
120	0.2727	0.3008	0.33	-9.34	9.34

11. Piping work and refrigerant charge

11.1 MAX.length allowed

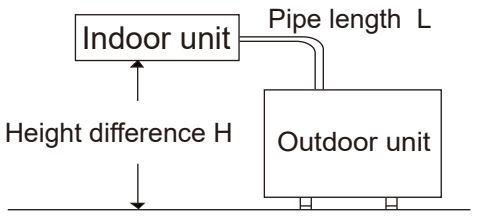

Model	Max. Tube length(L)	Max. Height difference(H)	Add. Refrigerant (exceed 5m)
9K/12K	15(m)	7.5(m)	15(g/m)
18K	20(m)	15(m)	15(g/m)
24K	30(m)	15(m)	35(g/m)
36K	30(m)	20(m)	35(g/m)
48K/60K	50(m)	30(m)	35(g/m)

*Do your best to reduce the pipe length. Long pipe may cause capacity of the indoor unit incline.

Refrigerant suitable for a piping length of 5m is charged in the outdoor unit at the factory. When the piping is longer than 5m, additional charging is necessary.

11.2 Oil trap

When the indoor unit is lower than outdoor unit and height is larger than 5m, an oil trap should be employed for every 5m.

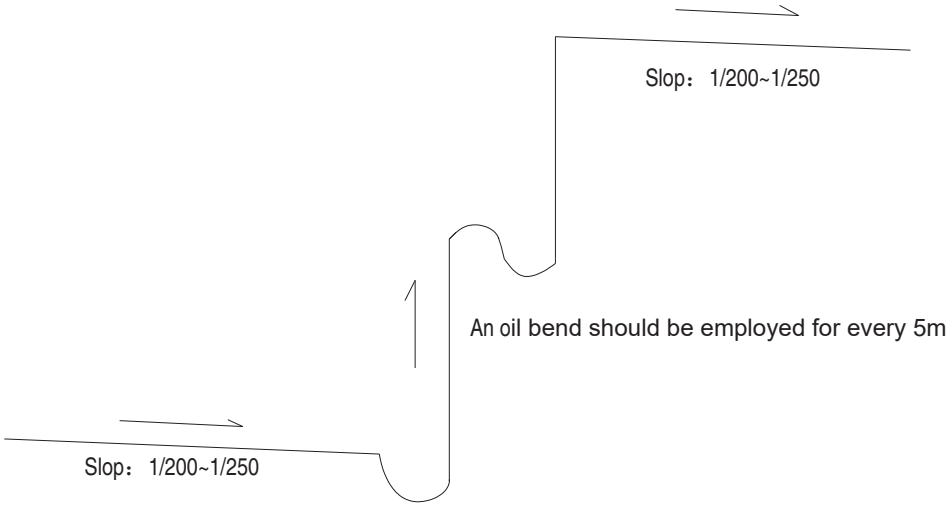

NOTE:

1.When the indoor unit is lower than outdoor unit for more than 5m, an oil bend should be employed on suction piping.

To avoid storing too much oil in the oil bend ,the oil bend should be as short as possible.

2.The horizontal piping should be slop down along the refrigerant flow direction, to bring the oil back to compressor, the slop is about 1/200 to1/250.

In order to ensure cooling/heating performance better, the refrigerant piping should be as short and straight as possible.

11.3 Air tight test

Do use nitrogen when performing air-tight test.

Connect the gauge manifold using charging hoses with a nitrogen cylinder to the check joints of the liquid line and the

gas line stop valves. Perform the air-tight test. Don't open the gas line stop valves. Apply nitrogen gas pressure of 4.15MPa.Check for any gas leakage at the flare nut connections, or brazed parts by gas leak detector or foaming agent. Gas pressure doesn’t decrease is OK. After the air tight test, release nitrogen gas.

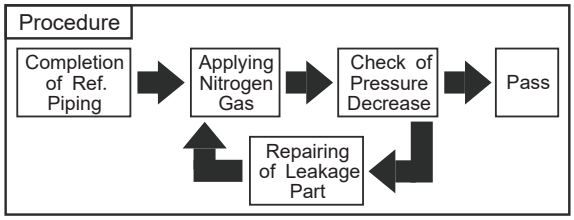

Air tight procedure

11.4 Additional refrigerant charge

Although refrigerant has been charged into this unit, additional refrigerant charge is required according to piping length.

• The additional refrigerant quantity should be determined and charged into the system according to the following procedure.

• Record the additional refrigerant quantity in order to facilitate maintenance and servicing activities.

Refrigerant charge before shipment (W_0 (kg))

W_0 is the outdoor unit refrigerant charge before shipment ；

Xg is additional refrigerant outdoor unit needed to charge according to piping length when installation .

Model	Refrigerant precharged before shipment(W0(g))	Total refrigerant pipe length	
		0m~5m	5m～60m
9K	850	0g	Xg = 15g / m ×(Total pipe length(m) -5)
12K	850	0g	
18K	1300	0g	
24K	1580	0g	Xg =35g / m ×(Total pipe length(m) -5)
36K（Single-Phase）	2150	0g	
36K（3-Phase）	2600	0g	
48K	2400	0g	
60K	3100	0g	

12. Control mode

12.1 Indoor unit mode control

1.Major general technical parameters

1 Remote receiver distance: 8 m.

2 Remote receiver angle: Less than 80 degrees.

3 Temperature control accuracy: ±1℃.

4 Time error: Less than 1%.

2. Functions of the controller

Control function

2.1 Emergency switch

Press the emergency button can realize the starting or closing ,machine, starting up according to the automatic mode of operation.

① Press this button to turn ON the unit，the conditioner will be run with auto mode, and press it again to turn off.

② When the machine is OFF,press and hold the emergency switch for 5 seconds, with 3 beeps , the indoor unit would turn to emergency running. In such station, machine would be forced to turn to cooling operation with high speed,the flaps sweeping and the air conditioner's operation is irrelevant with room temperatures.

③ If a remote signal has been received during the emergency run, the machine will operate upon the command of such a remote signal.

2.2 Operator-machine communication

Air conditioning and remote controller is provided with a temperature sensor. The remote controller on the temperature sensor to detect the default settings of room temperature at room temperature. If the indoor control unit for long time have not received remote control signal, will automatically switch to the air conditioner body temperature sensor.

2.3 Timer function

1. Timer on: When set to start in a time by the remote controller, the air conditioner starts in the timer on condition. When the set time is up, the air conditioner will turn on and operates in the preset conditions after receiving a signal from the remote controller. If the air conditioner has not received a signal from the remote controller when the set time is up, it will

automatically start and operate in the preset conditions.

2. Timer off: When set to stop in a set time by the remote controller, the air conditioner will start in the timer off condition. When the set time is up, the air conditioner will turn off after receiving a signal from the remote controller. If the air conditioner has not received a signal from the remote controller when the set time is up, it will turn off automatically.

3. Neither the turning on nor turning off operation will cancel the timer function.

2.4 Sleep

1. In the heating, cooling or dehumidifying mode, press the “Sleep” button on the remote controller to start or cancel the sleep function in turn, and at the same time the sleep icon on the display screen will be on or off accordingly.

2. In the heating mode, the set temperature will decrease automatically after the sleep function is started.

3. In the cooling mode, the set temperature will rise automatically after the sleep function is started.

4. In default, the setting is to cancel the sleep function. Turning off the unit will also cancel the sleep function.

2.5 mute function (only for some remote controller)

In the indoor machine operation mode，You may turn on mute function and turn off mute function by mute key, The air conditioner will run by mute fan speed in mute mode

2.6 prevent cooling wind mode

In the heating-run, to prevent the indoor fan from blowing cold air, the indoor fan will stop or run slowly until the coil is warmth.

2.7 Blow waste heating and waste cooling function

The heating mode, remote shutdown, such as indoor heat exchanger temperature is higher, the wind blowing out opportunities continue to run the waste heat.

Cool and dehumidification mode , after the compressor close, indoor machine will continue to set the speed of operation for a period of time.

2.8 Dehumidifying method:

Remote control setting dehumidifying mode, indoor machine forced to run at low speed （high power key or a strong bond also maintain a low wind speed）, the outdoor control mode is the same with cooling mode.

2.9 Auto re-start from Power Break

When the power supply is recovered after power break, all preset are still effective and the air-conditioner will run according to the previous setting.

How to set/cancel

It can be set /cancel by wire remote controller.

Details see Internal control parameter adjustment.

2.10 Filter clean

Filer clean led will light up when air filter is clogged with dust.

How to set/cancel

It can be set /cancel by wire remote controller.

Details see Internal control parameter adjustment.

12.2 Outdoor unit mode control

Control function

1. Cooling Anti-freeze Protection

To prevent indoor air conditioner evaporator temperature is too low, the indoor coil sensor for real time detection of evaporator. If the indoor coil temperature is too low, the compressor will protect.

2. Overload Protection

Air can heat exchanger temperature sensor for monitoring, when the sensor when the temperature is too high, the compressor will be automatic protection

3. Exhaust temperature protection

To prevent deterioration due to high exhaust temperature of compressor, the machine will realize the real-time detection of the temperature of exhaust gas. If the temperature is too high compressor automatic protection

4. Oil-return Control

When the compressor runs for a long time low frequencies, control system will start the return oil program. The system in the oil return to the compressor.

5.Operation Mode

Air conditioning mode is the operation mode set by users through remote controller, four modes are available: cooling, heating, dehumidification, as well as fan mode.

6. Four-way Valve Control

Four-way valve of the outdoor machine shuts down when cooling and defrosting but starts when heating. During the heating process, the four way valve to stop working for a period of time after compressor disconnect.

7. Start-up Protection

To prevent compressor from restart frequently in the condition that system pressure has not been completely balanced, it can’t be restarted within 3 minutes.

8. Pressure Protection

When the pressure increases to a preset value, the pressure switch will automatically protect. Compressor will stop and report the fault code protection.

13.Troubleshooting

13.1 Trouble guide

When the air conditioner failure occurs, the fault code will displays on control board , wire remote controller or display panel.

How to check fault codes

Indoor Unit

(1)Error codes indicated by wire remote controller (see figure below)

MOEDL:YXC-A01U(E)

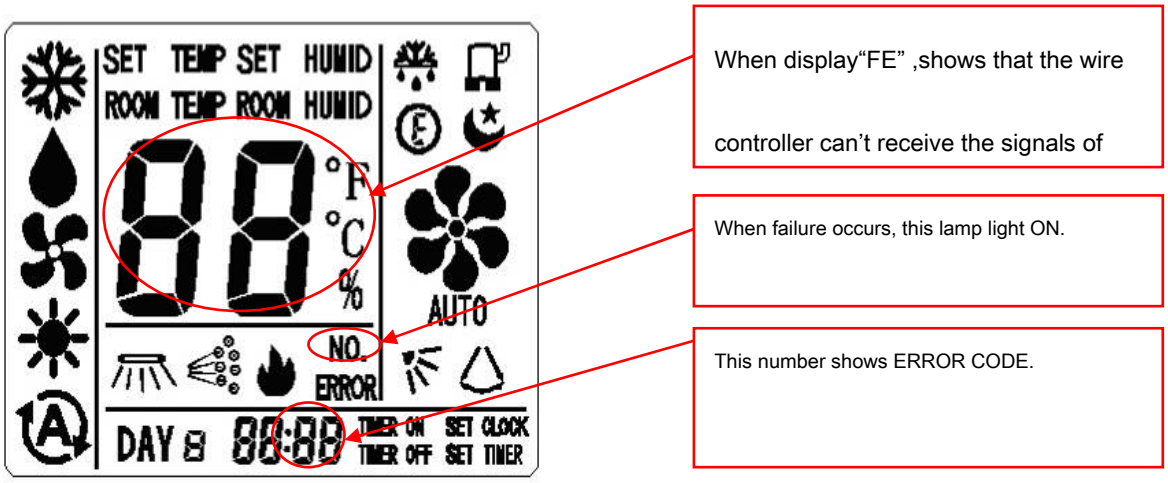

MOEDL:YXE-C01U,**YXE-C02U,YXE-D01U**

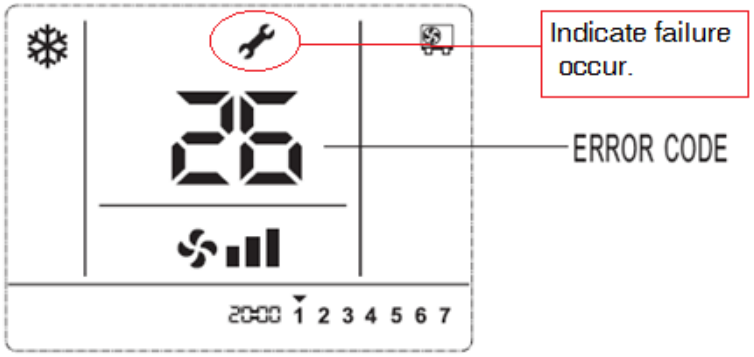

When the airconditioner is malfuction, will display on the LCD,and error codes will appear and blink.

FIG.1 ERROR CODE DISPLAY ON WIRE REMOT CONTROLLER

(2)Error codes indicated by LED lamps on display panel

Lamp RUN(LED2 ,red) and Lamp DEFROST（LED5 ,green）flashing，Lamp RUN display fault code ten digit number, lamp DEFROST display fault code single digit number (as shown fig. below).

For example，fault code 36: led RUN& defrost flash 3 times at the same time, and led DEFROST continue flash 3 times,reports No. 36 fault.

13. TROUBLESHOOTING

Display panel

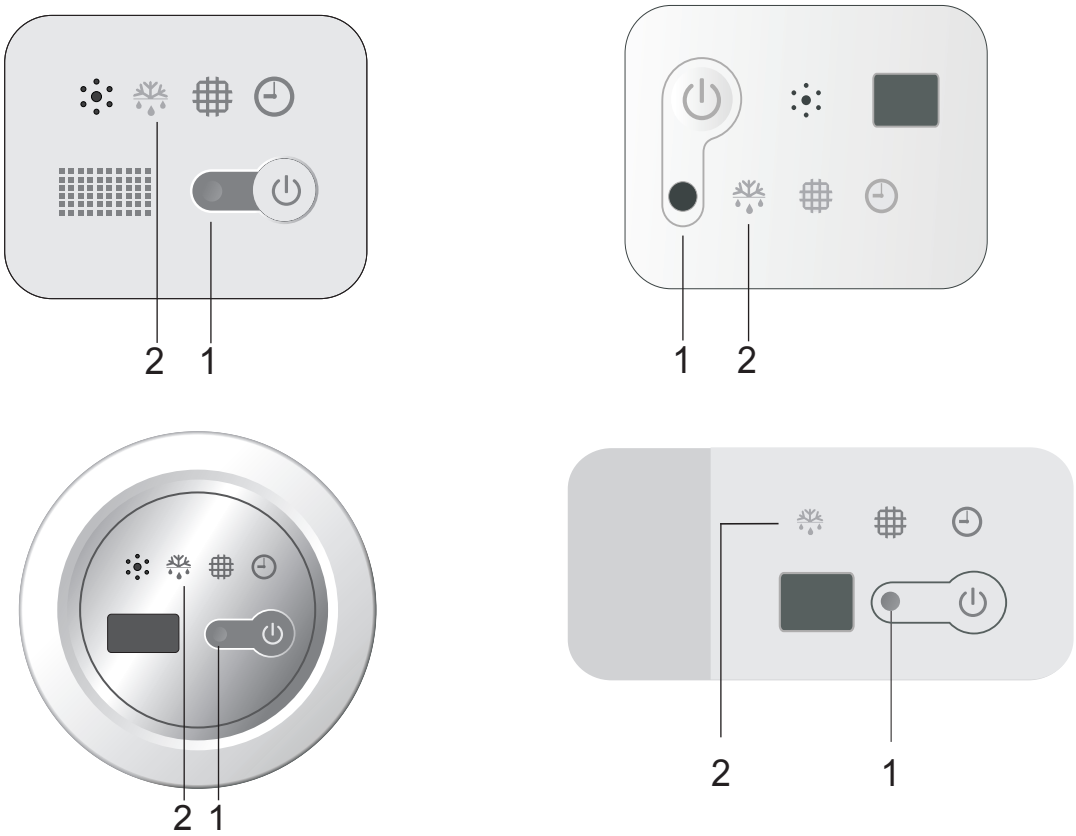

1 Run indicator (Red)
Indicates the fault code ten digital number.
2 Defrost indicator (Green)

Indicates the fault code singal digital number.

LED FALSH CONTROL：flash 300mS(T1)，off 300mS(T2)，after 2000mS(T3)fault code repeat displays. (as shown below)

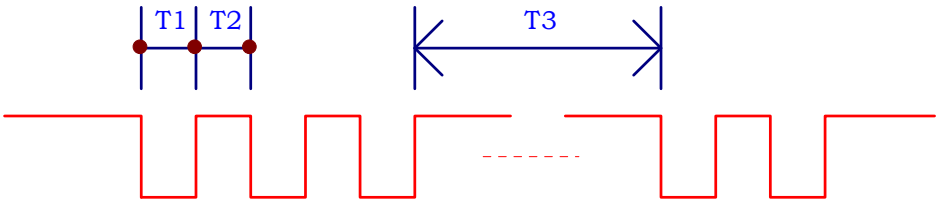

Fig.2 LED FALSH CONTROL

13. TROUBLESHOOTING

Outdoor Unit

ON/OFF UNITARY TYPE（with outdoor control board）

Fault code display by indicate lamps of outdoor control board flash.

The times that the lamp flashes equal to fault code.

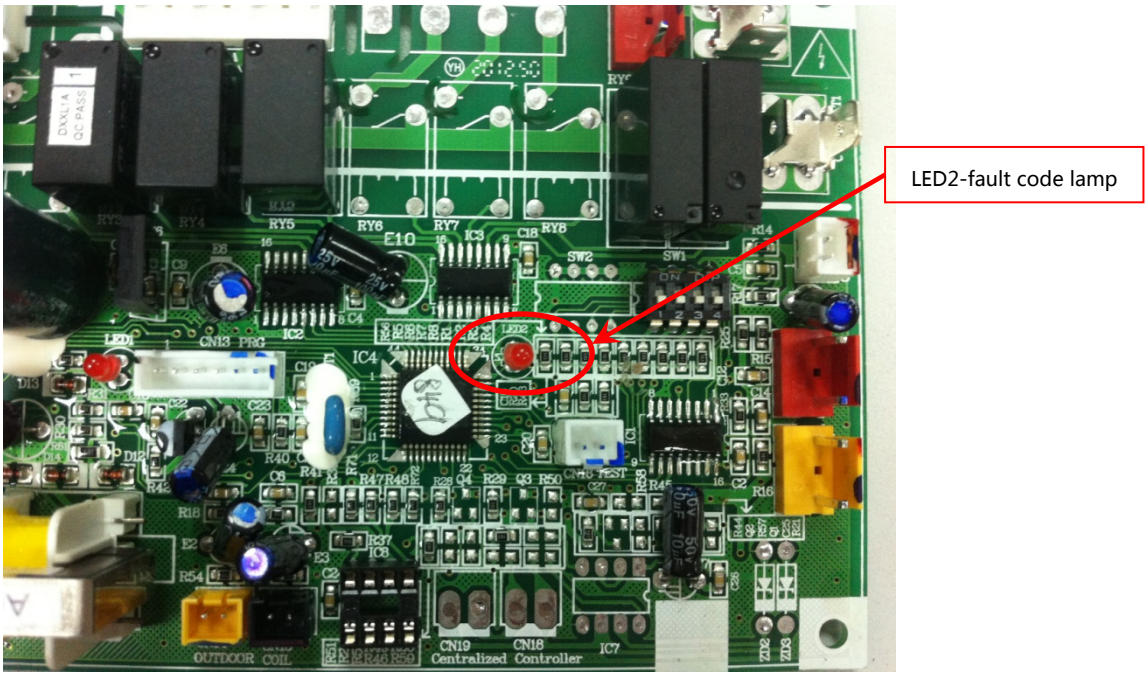

LED FALSH CONTROL：flash 300mS(T1)，off 300mS(T2)，after 900mS(T3)fault code repeat displays. (as shown below)

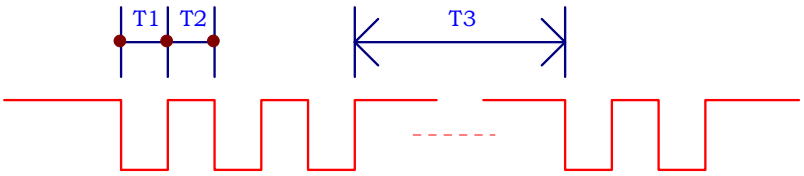

13. TROUBLESHOOTING

13.2 Error codes

The following is the fault code table of outdoor.

Sheet 1 Outdoor Error Code

Fault code	Fault Description	Possible Reason of Abnormality	How to Deal With	REMARKS
1	Outdoor ambient temperature sensor fault	1.The outdoor ambient temperature sensor connect loose; 2.The outdoor ambient temperature sensor is failure; 3.The sampling circuit is failure.	1.Reconnect the outdoor ambient temperature sensor; 2.Replace the outdoor ambient temp. sensor components; 3.Replace the outdoor control board components.	
2	Outdoor coil temperature sensor fault	1.The outdoor coil temperature sensor connect loose; 2.The outdoor coil temperature sensor is failure; 3.The sampling circuit is failure	1.Reconnect the outdoor coil temperature sensor; 2.Replace the outdoor coil temperature sensor components; 3.Replace the outdoor control board components.	
3	The unit over-current turn off fault	1.Control board current sampling circuit is failure; 2.The current is over high because of the supply voltage is too low; 3.The compressor is blocked; 4. Overload in cooling mode; 5.Overload in heating mode	1. Replace the electrical control board components; 2. Normally protection; 3. Replace the compressor ; 4. Please see the Note 3 ; 5. Please see the Note 4.	
4	EEprom Data error	1.EE components is failure; 2.EE components control circuit failure; 3.EE components insert incorrect.	1.Replace the EE components; 2.Replace the outdoor control board components; 3.Reassembly the EE components.	
5	Cooling freezing protection(the indoor coil temperature is too low) or heating overload(indoor coil temperature is too high)	1.The indoor unit can not blow air normally; 2.The room temperature is too low in cooling mode or the room temperature is too high in heating; 3.The filter is dirty; 4.The duct resistance is too high to result in low air flow; 5.The setting fan speed is too low; 6. The indoor unit is not standard installed, air inlet is too near with air outlet .	1.Check the indoor fan, indoor fan motor and evaporator whether normally; 2. Normally protection; 3.Clean the filter; 4.Check the volume control valve,duct length etc; 5.Set the speed with high speed; 6.Reinstall the indoor unit refer to the user manual to change the distance between the indoor unit and the wall or ceiling.	
6	Motor blockage protection	1.Outdoor ambient temperature sensor fault ; 2. Outdoor coil temperature sensor fault ; 3.Outdoor control board fault.	1.Replace outdoor ambient temperature sensor ; 2.Replace outdoor coil temperature sensor ; 3.Replace Outdoor control board.	Applied to ON/OFF air conditioners with 2 control boards

13. TROUBLESHOOTING

Fault code	Fault Description	Possible Reason of Abnormality	How to Deal With	REMARKS
7	The communication fault between the indoor unit and outdoor unit	1.The connection cable connect wrong between the indoor unit and outdoor unit; 2.The communication cable connect loose; 3.The communication cable is fault; 4.The indoor control board is fault; 5.The outdoor control board is fault; 6.Communication circuit fuse open; 7.The specification of communication cable is incorrect.	1.Reconnect the connection cable refer to the wiring diagram; 2.Reconnect the communication cable; 3.Replace the communication cable; 4.Replace the indoor control board; 5.Replace the outdoor control board; 6.Check the communication circuit, adjust the DIP switch and the short-circuit fuse. 7.Choose suitable communication cable refer to the user manual	
8	Phase current imbalance	1.The supply voltage fluctuates more than 4%; 2.The compressor power cord connect loose; 3.The AC contactor is fault; 4.The compressor motor fault.	1.Normally protection; 2.Reconnect the wire refer to the wiring diagram; 3.Replace the AC contactor; 4.Replace the compressor.	Application of 3-phase power supply models
9	U phase current fault	1.Compressor U phase power cord is fault or connect wrong; 2.Outdoor control board is fault; 3.The Compressor is fault	1.Replace the U phase power cord or reconnect the U phase power cord refer to the wiring diagram; 2.Replace the outdoor control board; 3.Replace the compressor.	Application of 3-phase power supply models
10	V phase current fault	1.Compressor V phase power cord is fault or connect wrong; 2.The outdoor control board is fault; 3.The compressor is fault	1.Replace the V phase power cord or reconnect the V phase power cord refer to the wiring diagram; 2.Replace the outdoor control board; 3.Replace the compressor.	Application of 3-phase power supply models
11	phase wrong failure	1.Three-phase power is abnormal; 2.The outdoor wiring connect wrong; 3. The outdoor control board is failure	1.Normally protection, please check the supply power 2.Check the wiring connection refer to the wiring diagram; 3.Replace the outdoor control board	Application of 3-phase power supply models
12	voltage absent phase	1.Three-phase power is abnormal; 2.The outdoor wiring connect wrong; 3.The outdoor control board is failure.	1. Normally protection 2. Check the wiring connection refer to the wiring diagram; 3. Replace the outdoor control board	Application of 3-phase power supply models
13	Compressor overheat protector device	1.The wiring of the overload protector connect loose. 2.The overload protector is failure . 3. The refrigerant is not enough; 4. The installation pipe is too long than normal, but not add the enough refrigerant; 5. The expansion valve is failure; 6. The outdoor control board is failure	1. Reconnect the wiring of the overload protector; 2. Replace the overload protector; 3. Check the welding point of the unit to confirm whether it is leakage, and then recharge the refrigerant; 4. Add the refrigerant; 5. Replace expansion valve; 6. Replace the outdoor control board.	

13. TROUBLESHOOTING

Fault code	Fault Description	Possible Reason of Abnormality	How to Deal With	REMARKS
14	The high pressure switch operate or the unit turn off for high pressure protection	1.The wiring of the high pressure protector connect loose; 2.The high pressure protector is failure; 3.The outdoor control board is abnormal; 4. Overload in cooling; 5. Overload in heating.	1.Reconnect the wiring the high pressure protector; 2. Replace the high pressure protector; 3. Replace the outdoor control board. 4. Please refer to the Note 3; 5. Please refer to the Note 4.	Applied to models with high pressure switch or pressure sensor
15	The low pressure switch protection or the unit turn off for low pressure protection	1. The wiring of the low pressure switch connect loose ; 2. The low pressure switch is failure; 3.The refrigerant is not enough; 4.The expansion valve failure in heating mode; 5.The outdoor control board is abnormal.	1. Reconnect the wiring of the low pressure switch; 2. Replace the low pressure switch; 3.Check the welding point to confirm whether the unit is leakage, and then add some refrigerant; 4. Replace the expansion valve; 5. Replace the outdoor control board.	Applied to models with low pressure switch or pressure sensor
16	Overload protection in cooling mode	System overload	Please refer to the Note 3.	
17	Discharge temperature sensor fault	1.The wiring of the discharge temperature sensor connect loose; 2.The discharge temperature sensor is failure; 3.The sampling circuit is abnormal.	1.Reconnect the wiring of the discharge temperature sensor; 2.Replace the discharge temperature sensor; 3.Replace the outdoor control board.	

13. TROUBLESHOOTING

The following is the fault code table of indoor.

Sheet 2 Indoor Error Code

Fault code	Fault Description	Possible Reason of Abnormality	How to Deal With	REMARKS
51	Drainage protection	1. The water level of the drain pan exceed safe level; 2. The cable of the water level switch connect loose; 3.The water level switch is failure; 4. The control board is failure.	1.1 Check whether there are something to block the drain hose or the height of the drain hose is too high; 1.2 Check the water pump and replace the water pump if the water pump is failure; 2. Reconnect the cable of the water level switch refer to the wiring diagram; 3. Replace the water level switch; 4. Replace the control board.	
64	Communication between Indoor & Outdoor unit Fault	1. The connection cable between the indoor unit and the outdoor unit connect wrong; 2.The communication cable connect loose; 3.The communication cable between the indoor unit and the outdoor unit is failure or the cable between the indoor control board to terminal is failure or the cable between the outdoor control board to the terminal is failure; 4. The indoor control board is failure; 5. The outdoor control board is failure.	1. Reconnect the connection cable refer to the indoor and outdoor wiring diagram; 2. Reconnect the communication cable refer to the indoor and outdoor wiring diagram; 3. Replace the communication cable refer to the indoor and outdoor wiring diagram; 4. Replace the indoor control board; 5. Replace the outdoor control board.	
71	Indoor unit zero check fault	1. The motor wire is loosen; 2. The motor connect is open; 3. The motor is failure; 4. Control board is failure. 5. Indoor fan is baffled.	1. Replace the motor wire and make sure the wire connect is well; 2. Replace the motor wire; 3. Change the motor; 4. Change the indoor control board; 5. Check and elimination of fan motor rotation.	
72	Indoor fan motor fault	1. The cable of the indoor fan motor connect loose; 2. The cable of the indoor fan motor is failure; 3.The indoor fan motor is failure; 4. The indoor control board is failure .	1. Reconnect the cable of the fan motor; 2. Replace the cable of the fan motor; 3. Replace the fan motor; 4. Replace the indoor control board; 5. Check the indoor fan and ensure the indoor fan can run normally.	
73	Indoor EEPROM Data 1 fault	1.Indoor EE components is failure; 2.The control circuit of the EE components is failure; 3.The EE components has been inserted with opposite direction	1. Replace the EE components; 2. Replace the indoor control board; 3. Reassembly the EE components of the indoor control board	
81	Indoor ambient Temperature Sensor Fault	1. The cable of the room temperature sensor connect loose; 2. The room temperature sensor is failure; 3. The sampling circuit is abnormally	1.Reconnect the cable of the room temperature sensor; 2. Replace the room temperature sensor; 3. Replace the indoor control board.	

Fault code	Fault Description	Possible Reason of Abnormality	How to Deal With	REMARKS
83	Evaporator Middle Temperature Sensor Fault	1.The cable of the coil temperature sensor of the evaporator is failure; 2. The coil temperature sensor of the evaporator is failure; 3. The sampling circuit is abnormally	1. Reconnect the cable of the coil temperature sensor of the evaporator; 2. Replace the coil temperature sensor of the evaporator; 3. Replace the indoor control board.	
FE (254)	Communication between main control board &Wiring remote controller Fault (display on wiring remote controller)	1. The wiring between the wiring controller to the indoor control board connect loose; 2. The sequence of the wiring between the wiring controller to the indoor control board is wrong; 3. The wiring between the wiring controller to the indoor control board is failure; 4.The wiring controller is failure; 5. The indoor control board is abnormally	1.Reconnect the wiring between the wiring controller to the indoor control board; 2.Replace the wiring between the wiring controller to the indoor control board; 3.Replace the wiring between the wiring controller to the indoor control board; 4. Replace the wiring controller; 5. Replace the indoor control board	
ER	Communication between main control board &display board Fault (displays on display board)	1.The wiring between the display board to the indoor control board connect loose; 2.The sequence of the wiring between the display board to the indoor control board is wrong; 3.The wiring between the display board to the indoor control board is failure; 4. The display board is failure; 5. The indoor control board is failure.	1. Reconnect the between the display board to the indoor control board; 2. Replace the wiring between the display board to the indoor control board; 3. Replace the wiring between the display board to the indoor control board; 4. Replace the display board; 5. Replace the indoor control board.	

13. TROUBLESHOOTING

NOTE 1:

If the indoor unit can not turn on or the indoor unit turn off itself after 30s, at the same time the unit do not display the error code, please check the fire and the socket of the control board.

Note 2:

If the indoor unit display the 75,76,77,78 error code after you turn on the unit, please check the TEST seat of the indoor control board or the TEST detection circuit whether exists short circuit.

Note 3:Overload in cooling mode

overload in cooling mode		
sr.	The root cause	Corrective measure
1	The refrigerant is excessive	Discharge the refrigerant, and recharge the refrigerant refer to the rating label
2	The outdoor ambient temperature is too high	Please use within allowable temperature range
3	The air outlet and air inlet of the outdoor unit is short-circuit	Adjust the installation of the outdoor unit refer to the user manual
4	The outdoor heat exchanger is dirty, such as condenser	Clean the heat exchanger of the outdoor unit, such as condenser
5	The speed of the outdoor fan motor is too low	Check the outdoor fan motor and fan capacitor
6	The outdoor fan is broken or the outdoor fan is blocked	Check the outdoor fan
7	The air inlet and outlet has been blocked	Remove the blocked thing
8	The expansion valve or the capillary is failure	Replace the expansion valve or the capillary

Note 4:Over load in heating mode

Overload in heating mode		
sr.	The root cause	Corrective measure
1	The refrigerant is excessive	Discharge the refrigerant, and recharge the refrigerant refer to the rating label
2	The indoor ambient temperature is too high	Please use within allowable temperature range
3	The air outlet and air inlet of the indoor unit is short-circuit	Adjust the installation of the indoor unit refer to the user manual
4	The indoor filter is dirty	Clean the indoor filter
5	The speed of the indoor fan motor is too low	Check the indoor fan motor and fan capacitor
6	The indoor fan is broken or the outdoor fan is blocked	Check the indoor fan
7	The air inlet and outlet has been blocked	Remove the blocked thing
8	The expansion valve or the capillary is failure	Replace the expansion valve or the capillary

14. Checking components

14.1 Check refrigerant system

TEST SYSTEM FLOW

Conditions: ① Compressor is running.

② The air condition should be installed in good ventilation.

Tool: Pressure Gauge

Technique: ① see ② feel ③ test

SEE ----- Tube defrost.

FEEL ----- The difference between tube's temperature.

TEST ----- Test pressure.

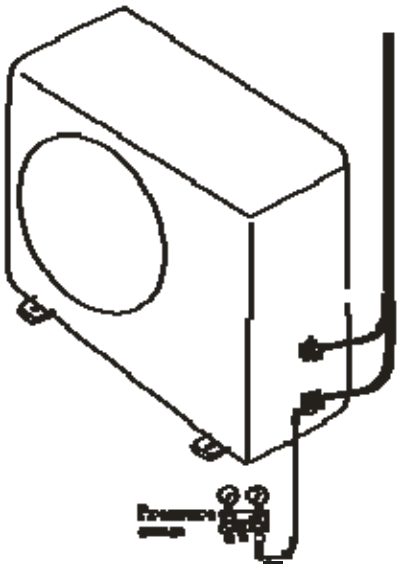

14. CHECKING COMPONENTS

Test system flow

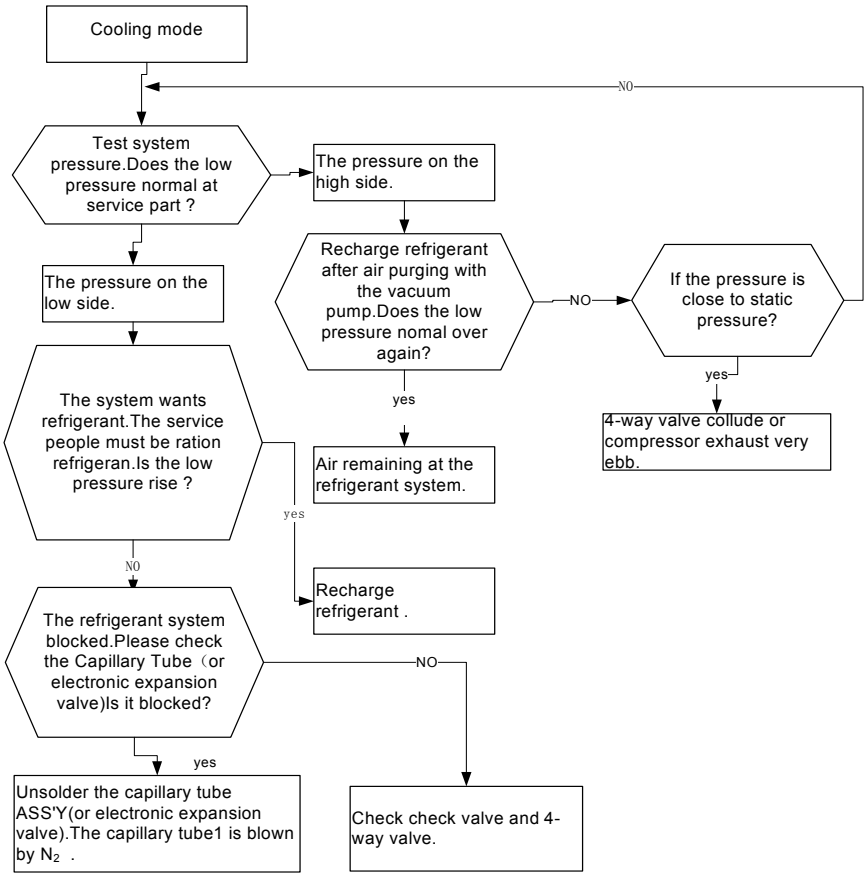

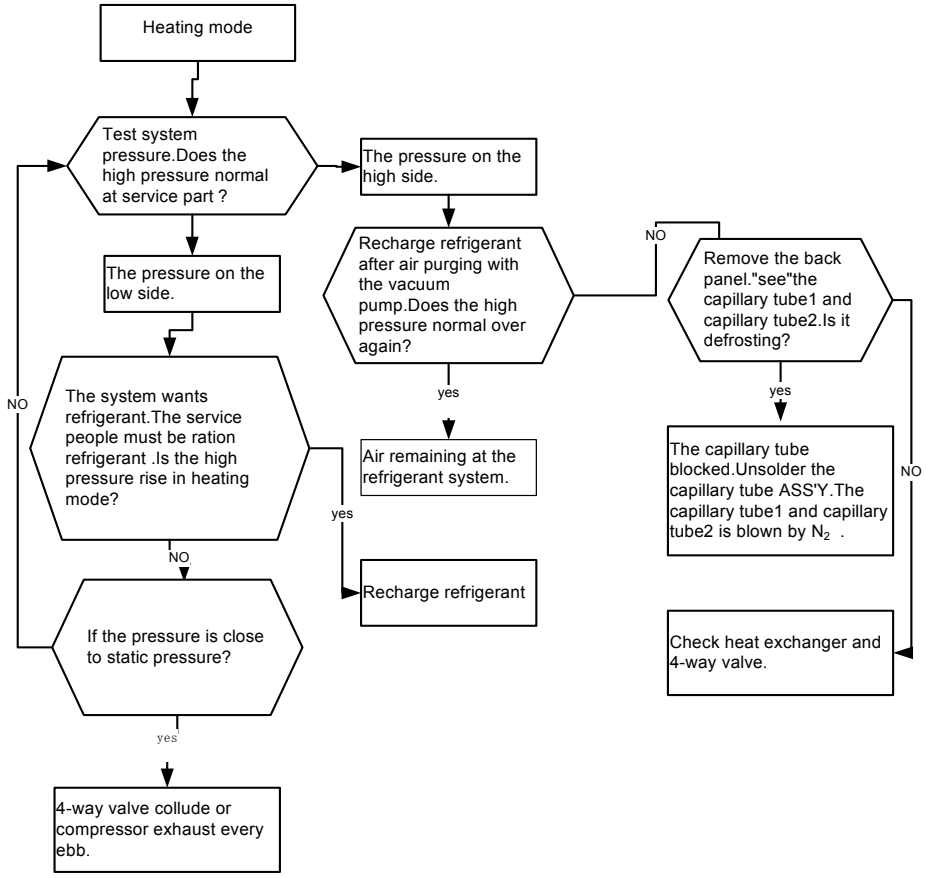

14.2 Check parts unit

1. INDOOR FAN MOTOR

Duct type

9K/12K Motor model：YSK110-28-4-A

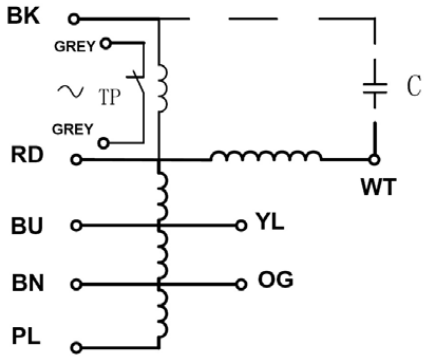

Main winding resistance：Black-Red 232Ω±15%；

Red-Blue 79Ω±15%；

Blue-Brown 160Ω±15%；

Brown-Purple 44Ω±15%；

Auxiliary winding resistance：Red-White 110Ω±15%；

18K Motor model：YSK95-45-4-B

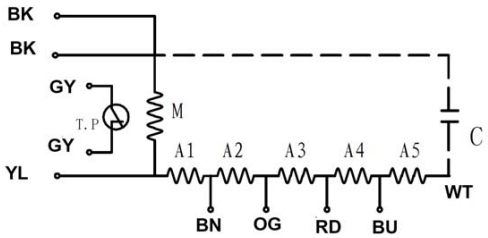

Main winding resistance：Black-Yellow 138Ω±15%；

Auxiliary winding resistance：

Black-White	178Ω±15%；
Yellow-Brown	42.5Ω±15%；
Brown-Orange	22Ω±15%；
Orange-Red	17.6Ω±15%；
Red-Blue	14.6Ω±15%；
Blue-White	81.4Ω±15%；

24K/36K

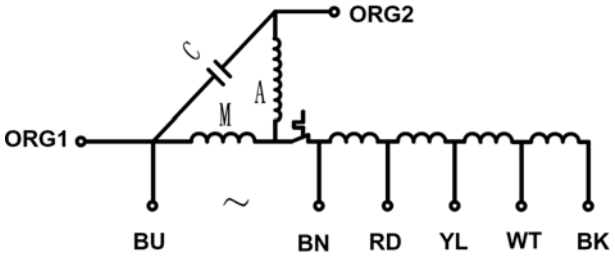

24K Motor model：Y6S419C56

Main winding resistance：Black-Red 209.4Ω±15%；

Auxiliary winding resistance：

Red-Yellow	36.2Ω±15%；
Yellow-White	51.5Ω±15%；
White-Blue	109.2Ω±15%；

36K Motor model：Y7S423B814

Main winding resistance：Black-Red 75Ω±15%；

Auxiliary winding resistance：Red-Blue 97.5Ω±15%；

14. CHECKING COMPONENTS

48K/60K: Motor model：Y7S423C237

Main winding resistance：Brown-Blue 17.89Ω ±12%；

Auxiliary winding resistance：

Orange1-White	178Ω ±15%；
Yellow-Brown	27.2Ω ±12%
Brown-Red	3.35Ω ±12%；
Red-White	4.77Ω ±15%；
White-Black	2.72Ω ±12%；

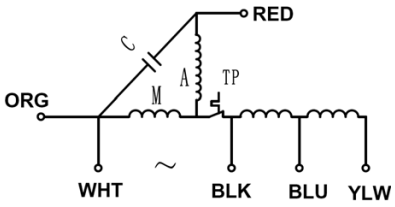

Cassette

9K/12K AC Motor model： YDK95-12-6-A
Main winding resistance：White-Black 486Ω±15%；
Auxiliary winding resistance：
Black-Blue 90Ω±15%；
Blue-Yellow 108Ω±15%；
Yellow-Red 190Ω±15%；

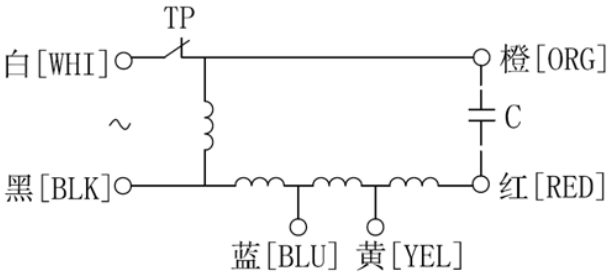

18K/24K AC Motor model： YDK28-8E
Main winding resistance：Black-Red 296Ω±15%；
Auxiliary winding resistance：
Red-Blue 131Ω±15%

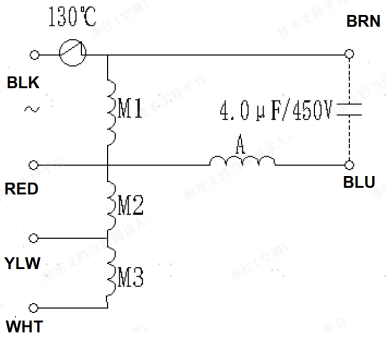

30K/36K/42K/48K AC Motor model： YDK90-6L
Main winding resistance：Black-Red 70Ω±15%；
Auxiliary winding resistance：
Red-Blue 53Ω±15%

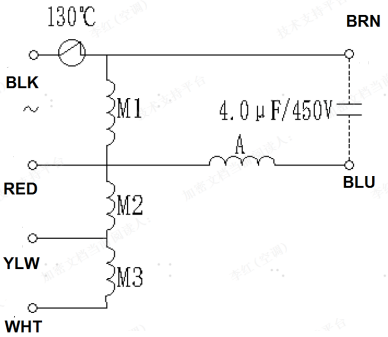

14. CHECKING COMPONENTS

Ceiling & Floor

18K/24K

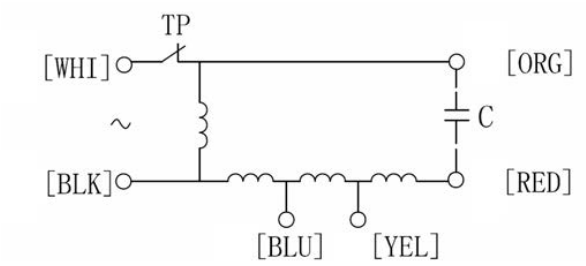

18K Motor model：YSK110-22-4-A

Main winding resistance：White-Black 187Ω±15%；

Auxiliary winding resistance：

Black-Red	210Ω±15%；
Black-Blue	37.5Ω±15%；
Blue-Yellow	27.8Ω±15%；
Yellow-Red	146Ω±15%；

24K Motor model：YSK110-100-4-A

Main winding resistance：White-Black 55Ω±15%；

Auxiliary winding resistance：

Black-Red	52.5Ω±15%；
Black-Blue	23.2Ω±15%；
Blue-Yellow	10.9Ω±15%；
Yellow-Red	18.3Ω±15%；

36K

Motor model：Y7S423B212

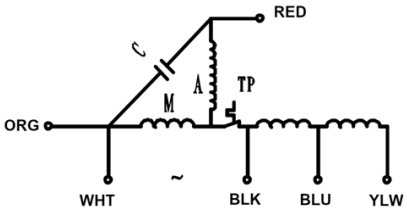

Main winding resistance：White-Black 41.49Ω±12%；

Auxiliary winding resistance：

Black-Blue	13.25Ω±12%；
Blue-Yellow	12.39Ω±12%；
Red-Black	35.21Ω±15%；

48K/60K

Motor model：Y7S423C032

Main winding resistance：White-Black 42.69Ω±12%；

Auxiliary winding resistance：

Black-Blue 9.19Ω±12%； Blue-Yellow 9.09Ω±12%； Red-Black 36.41Ω±12%；

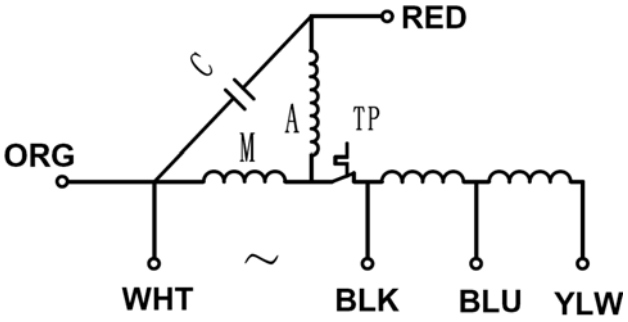

14. CHECKING COMPONENTS

Test in resistance.

TOOL: Multimeter.

Test the resistance of the main winding. The indoor fan motor is fault if the resistance of main winding 0(short circuit)or∞（open circuit）.

Test in voltage

TOOL: Multimeter.

Insert screwdriver into to rotate indoor fan motor slowly for 1 revolution or over, and measure voltage "YELLOW" and "GND" on motor. The voltage repeat 0V DC and 5V DC.

Notes:

Please don't hold motor by lead wires.

Please don't plug IN/OUT the motor connecter while power ON.

Please don't drop hurl or dump motor against hard material. Malfunction may not be observed at early stage after such shock. But it may be found later, this type of mishandling void our warranty.

2. OUTDOOR FAN MOTOR

AC MOTOR

9K/12K-- motor model: YDK25-6H3(YDK25-6H)

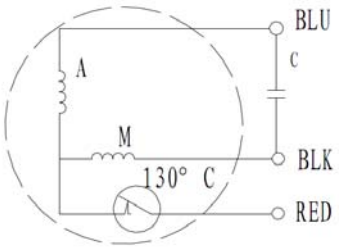

Main winding resistance：Black-Red 263Ω ±15%；

Auxiliary winding resistance：Red-Blue 503Ω ±15%；

18K-- motor model: DG13Z1-75

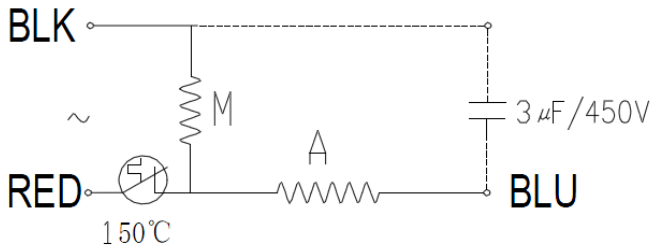

Main winding resistance：Black-Red 178Ω ±15%；

Auxiliary winding resistance：Red-Blue 161.5Ω ±15%；

24K-- motor model: Y6S643C252G

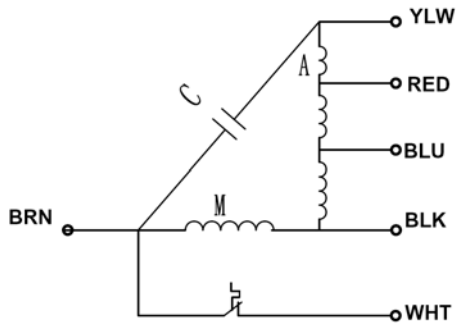

Main winding resistance：White-Black 81.84Ω ±15%；

Auxiliary winding resistance：

Black-Blue 21.32Ω ±15%；
Black-Red 24.03Ω ±15%；
Yellow-Red 48.36Ω ±15%；

14. CHECKING COMPONENTS

36K—motor model: Y6S696D511

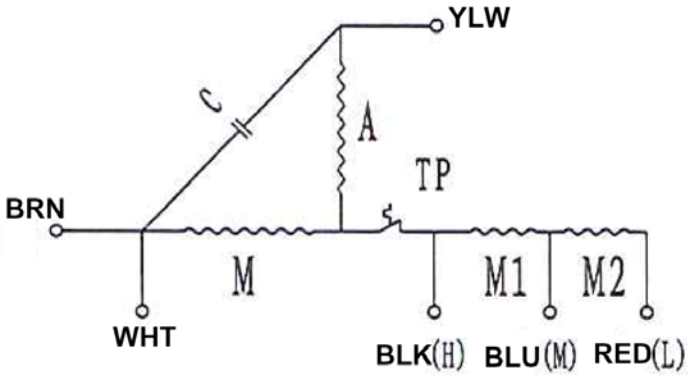

Main winding resistance：Black-Brown 75Ω ±12%；

Auxiliary winding resistance：

Black-Blue 24.8Ω ±12%；
Blue-Red 10.4Ω ±12%；
Black-Yellow 46.2Ω ±12%；

48K/60K:

Motor Model:YDK29-6I-39+ YDK29-6-41

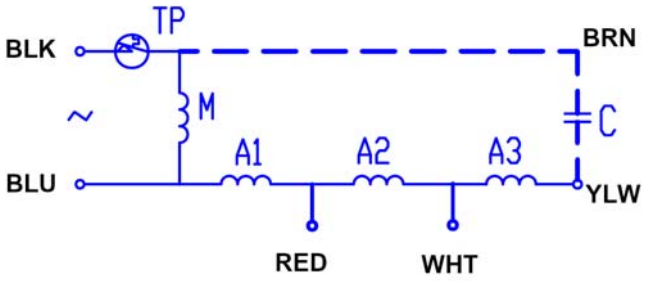

Main winding resistance：Black-Blue 169Ω ±15%；

Auxiliary winding resistance：Blue-Red-White-Yellow 42/21/87Ω ±15%；

14. CHECKING COMPONENTS

3. COMPRESSOR

COMPRESSOR EXAMINE AND REPAIR

9K/12K：ASM135V1VDZ

18K: QXA-D19F030A

24K:ASH280MV-C8DU

36K(Single-Phase):ATH356MV-C9EUA

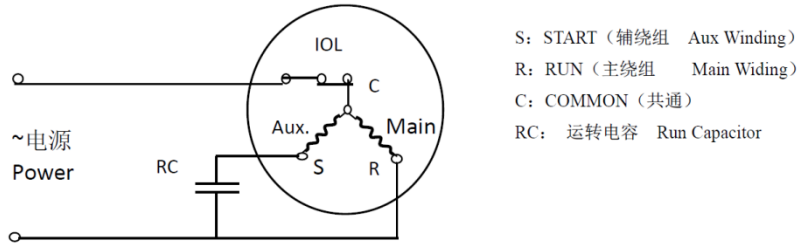

36K(3-Phase):ATH420UC-C9U1

48K:ATE550SC3Q9RK

60K:ATE650SC3Q9JK

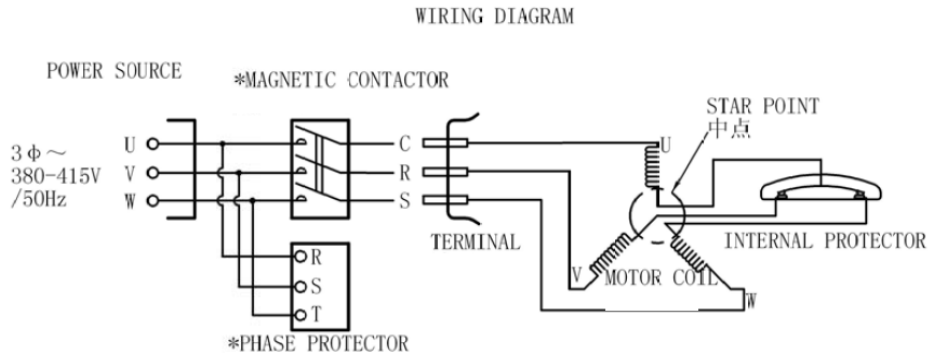

Test in resistance.

TOOL: Multimeter.

Test the resistance of the winding. The compressor is fault if the resistance of winding 0(short circuit)or∞（open circuit）

Familiar error:

1）Compressor motor lock.

2）Discharge pressure value approaches static pressure value .

3）Compressor motor winding abnormality.

Notes：

1）Don’t put a compressor on its side or turn over.

2) Please assembly the compressor in your air conditioner rapidly after removing the plugs. Don't place the comp. In air for along time.

3）Avoiding compressor running in reverse caused by connecting electrical wire incorrectly.

4）Warning! In case AC voltage is impressed to compressor, the compressor performance will below because of its rotor magnetic force decreasing.

4. INDUCTANCE

Familiar error:

1）Sound abnormality

2）Insulation resistance disqualification.

5. STEP MOTOR

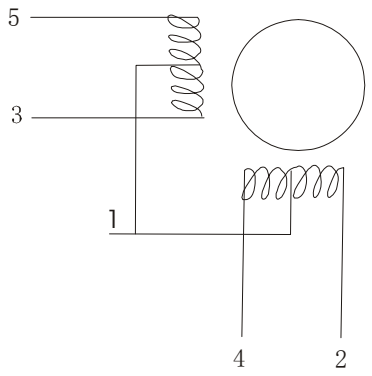

Test in resistance.

TOOL: Multimeter.

Test the resistance of winding. The stepper motor is fault if the resistance of winding 0(short circuit)or∞（open circuit）.

6. FUSE

Checking continuity of fuse on PCB ASS'Y.

Remove the PCB ASS'Y from the electrical component box. Then pull out the fuse from the PCB ASS'Y (Fig.1)

14. CHECKING COMPONENTS

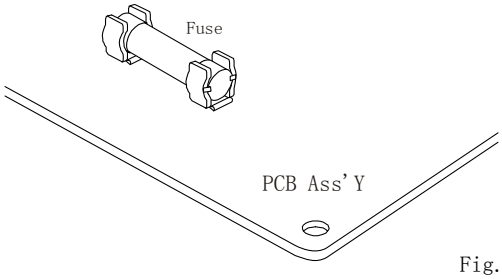

Fig.1

Check for continuity by a multimeter as shown in Fig.2.

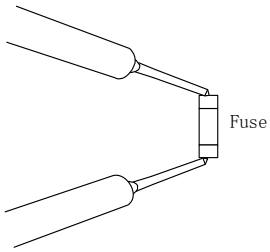

Fig.2

7.CAPACITOR

Remove the lead wires from the capacitor terminals, and then place a probe on the capacitor terminals as shown in Fig.3.

Observe the deflection of the pointer, setting the resistance measuring range of the multimeter to the maximum value.

* The capacitor is "good" if the pointer bounces to a great extent and then gradually returns to its original position.

* The range of deflection and deflection time differ according to the capacity of the capacitor.

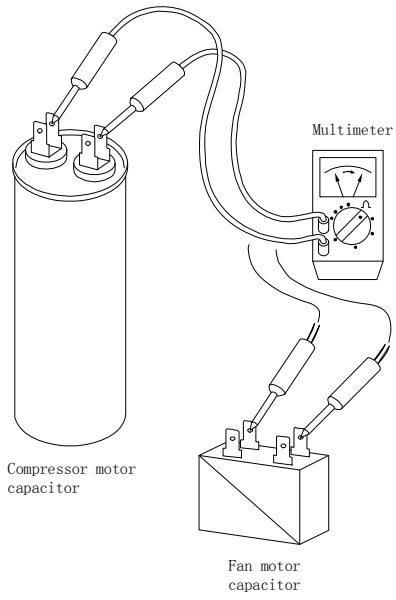

Fig.3

Hisense

Product improvement, specifications and appearance in this manual are subject to change without prior notice.